THE ELECTRIC FURNACE

Frontispiece

COLBY INDUCTION STEEL FURNACE.

THE ELECTRIC FURNACE

ITS CONSTRUCTION, OPERATION AND USES

BY

ALFRED STANSFIELD, D.Sc.

ASSOCIATE OF THE ROYAL SCHOOL OF MINES; FELLOW OF THE ROYAL SOCIETY OF CANADA; BIRKS PROFESSOR OF METALLURGY IN MCGILL UNIVERSITY, MONTREAL

SECOND EDITION
FIFTH IMPRESSION

McGRAW-HILL BOOK COMPANY, INC.
NEW YORK: 239 WEST 39TH STREET
LONDON: 6 & 8 BOUVERIE ST., E. C. 4
1914

THE MAPLE PRESS YORK PA

DEDICATED TO

EUGENE E. R. HAANEL, Ph.D., F.R.S.C.

DIRECTOR OF MINES, OTTAWA

IN RECOGNITION OF THE SERVICE HE HAS RENDERED
TO ELECTRIC SMELTING THROUGHOUT THE WORLD

PREFACE TO SECOND EDITION

Since the first appearance of this book, in 1907, the development of the electric furnace and its uses has been so rapid that this edition has been increased to more than twice the size of the first, and the whole has been reset.

Care has been taken to include, as far as possible, all recent developments of importance, but as the preparation of this edition has occupied at least three years, it has been difficult to bring each part as closely up to date as is desirable in so up to the minute a subject as electric smelting.

I wish to express my indebtedness to the following gentlemen and others who have helped me with information, advice, or the use of illustrations for the present edition: The Canadian Böving Company, The Carborundum Company, Electro Metals Company, Mr. J. W. Evans, Mr. A. M. Fairlie, Dr. K. G. Frank, Mr. J. H. Gray, Dr. Eugene Haanel, Prof. L. A. Herdt, Dr. Carl Hering, Dr. R. S. Hutton, Messrs. Harbison-Walker, Messrs. Leavitt and Company, Mr. F. Louvrier, Mr. Dorsey A. Lyon, The Norton Company, Dr. H. N. Potter, Prof. J. W. Richards, Mr. T. D. Robertson, Mr. E. R. Taylor, Titanium Alloy Manufacturing Company, Mr. F. J. Tone, Mr. R. Turnbull, Mr. W. R. Walker, Mr. T. L. Willson and Mr. R. A. Witherspoon.

I am very greatly indebted to my wife, who read the whole book with me in proof, and to Mr. J. W. Hayward, who drew nearly all the new illustrations for this edition, and read a large part of the manuscript.

ALFRED STANSFIELD.

MONTREAL,
December 1, 1913.

PREFACE TO FIRST EDITION

On my first visit to Canada, in 1897, I constructed an electric furnace and showed it in operation at a lecture on Canada's metals, which was delivered by the late Sir William Roberts-Austen. The application of electrical heat to Metallurgy has always interested me greatly and I hope that this little book may serve to instil this interest in others, and to help forward the application of electric smelting in a country which is so rich in water-powers and mineral resources.

This book originated in a series of papers, written about a year ago for the "Canadian Engineer," in which I endeavored to present, as simply as possible, the principles on which the construction and use of the electric furnace depend, and to give an account of its history and present development.

The original papers were written at a time when the experiments of Dr. Haanel, at Sault Ste. Marie, were attracting public attention, and a large section of the book has been devoted to the consideration of these and other advances in the electrometallurgy of iron and steel.

I wish to thank all who have helped me in the preparation of this book, including Dr. Haanel, whose valuable monographs have formed the basis of my chapter on iron and steel, and to whom I am indebted for additional information on this branch of the subject; Prof J. W. Richards, who has taken an interest in my work, and whose book on "Metallurgical Calculations" has been of considerable assistance in writing the chapter on furnace efficiencies; Mr. E. A. Colby, who gave me information in regard to his induction steel furnace and a sketch for Fig. 25; Mr. Francis A. J. Fitzgerald, who supplied me with the data for Table X.; the editor of the "Electrochemical and Metallurgical Industry," who loaned the block for the frontispiece, and the International Acheson Graphite Company, who gave me information about their furnaces and lent the block for Fig. 40. I also wish to thank those of my personal friends who assisted me in the tedious work of proof-reading.

ALFRED STANSFIELD.

McGILL UNIVERSITY, MONTREAL,
November, 1907.

CONTENTS

CHAPTER V

CHAPTER VI

CHAPTER VII

CHAPTER VIII

CHAPTER IX

CHAPTER X

CHAPTER XI

CHAPTER XII

CHAPTER XIII

CHAPTER XIV

CHAPTER XV

INTRODUCTION

The rapid growth of the electric furnace makes it increasingly difficult for the metallurgist to keep in touch with its recent developments. A few years ago it was a scientific curiosity; now it threatens to rival the Bessemer converter, the open-hearth steel furnace, and even the blast furnace itself.

The halo of romance, that has always surrounded electricity in all its forms, has caused the wildest schemes to be originated, and has given them a hearing; while, on the other hand, practicable electric smelting processes have been considered visionary.

In this book, it has been the author's purpose to trace the evolution of the electric furnace from its simplest beginnings, and to set forth, as briefly as is consistent with clearness, the more important facts relating to its theory and practice.

The scope and arrangement of the book can be gathered from the titles of its fifteen chapters. The first is historical; four deal with the classification, efficiency, construction and operation of electric furnaces; nine chapters treat of the various uses of the electric furnace, and the last is an attempt to look into the future of the electric furnace.

THE ELECTRIC FURNACE

ITS CONSTRUCTION, OPERATION AND USES

CHAPTER I

HISTORY OF THE ELECTRIC FURNACE

The electric furnace is of comparatively recent origin. The first of any practical importance, was constructed by Sir W. Siemens in 1878,[1] and in 1882[2] he melted in an electric furnace some 20 lb. of steel and 8 lb. of platinum. Since that time the development has been rapid.

The beginning of the electric furnace may, however, be traced much farther back than this. In 1800—only a few months after Volta's discovery of the electric battery—Sir Humphry Davy,

FIG. 1.—The electric arc.

experimenting with the new battery, produced the first arc light between carbon points,[3] and, as the electric arc is the source of heat in an important class of electric furnaces, its discovery was the first step in their evolution.

[1] Siemens' Electric Furnace, Journ. Soc. of Telegraph Engineers, June, 1880.

[2] Siemens and Huntington, British Assoc. for the Adv. of Science, 1882, p. 496.

[3] Davy, S. P. Thompson's Electricity and Magnetism, Phil. Trans. Roy. Soc., vol. xcvii (1809), p. 71, and vol. cxi (1821), p. 427.

The electric arc, as shown in Fig. 1, may be produced by passing an electric current through two carbon rods which touch each other and then drawing them apart. The arc consists of a flame of vaporized carbon, extending from one carbon pole to the other. When an electric current meets with resistance, it is transformed into heat, and, as the carbonaceous vapor offers a considerable resistance to the electric current, a very high temperature is produced; high enough to melt or vaporize any known substance.

In the direct-current arc the positive carbon, which is marked + in the figure, is hollowed out by the current, and becomes intensely white hot, presenting the dazzling bright light with which all are acquainted. The arc light is, in fact, a miniature electric furnace of the arc type; and produces a temperature not much inferior to that in any modern electric furnace. It has been supposed that the hollowing out of the positive carbon is due to an electrolytic conveyance of carbon from the positive to the negative electrode; but recent experiments show that any electrical transfer of carbon is in the other direction, being a stream of electrons from the negative electrode, like the kathode discharge in a vacuum tube. The bombardment of the positive carbon by this stream of electrons, generates so much heat that the electrode becomes white hot and rapidly evaporates, thus producing the characteristic crater-like form.

This explanation appears to fit in well with the appearance of an arc that has been drawn out to a little more than its normal length. The arc (which should only be observed through a dark-colored glass screen) will be noticed to stream freely from the tip of the negative electrode, and its starting-point on this electrode is unaffected by drafts or magnetic influences. The current passes with difficulty on to the positive electrode, and does not always select the point nearest to the negative electrode, but is blown about and wanders over a considerable area of the electrode. The temperature of the hottest part of the positive carbon in the electric arc has been measured, and is considered to be about 3,600° C. (6,500° F.), which is twice the temperature of melting platinum or melting quartz, and more than twice the temperature of the open-hearth steel furnace.[1]

In the use of a direct-current arc for lighting, it is usual to make

[1] For additional information about electric arcs see W. S. Weedon, "A Contribution to the Study of the Electric Arc," Trans. Am. Electrochem. Soc., v, 1904, p. 171.

the upper carbon the positive electrode, in order to throw the greatest illumination downward. In Fig. 1 this arrangement has been reversed, and in this position the positive carbon serves as a miniature cup in which any substance can be placed in order to study its behavior at these high temperatures.

The writer has placed a small cylinder of refractory material around the lower carbon of such an arc, and, with this simple apparatus, was able to repeat some of Moissan's well-known experiments on the production of the diamond.

In another form of electric furnace, the heat is produced by the passage of the electric current through a solid or liquid conductor. This method of producing electrical heat is typified in the common incandescent lamp. The earliest use of this method of heating was in 1815, when W. H. Pepys[1] solved an important question in regard to the nature of steel by means of a miniature resistance furnace operated by a battery. He placed some diamond dust (a pure form of carbon) in a cut in a piece of wrought-iron wire, and passed an electric current through the wire, thus heating it to redness. The iron absorbed the diamond dust and became converted into steel.

Robert Hare[2] described in 1839 an electric furnace which he had constructed under the bell jar of an air pump. The furnace was operated in a vacuum by means of an electric battery, and in spite of the very small amount of power available, Hare succeeded in forming calcium carbide and graphite, and in isolating phosphorus and calcium.

Although the principle of electric heating had thus been discovered early in the century, very little progress was made with the practical application of this source of heat until the discovery of the dynamo. Among those who attempted to utilize electrical heat in small furnaces, with the aid only of powerful electric batteries, may be mentioned—Napier, who, in 1845, produced a small arc in a plumbago crucible, intending to reduce certain metals from their ores; Despretz,[3] who, in 1849, made a small tube of charcoal, about an inch long, and heated it by passing through it an electric current

[1] Phil. Trans. Roy. Soc., 1815, vol. cv, p. 371.

[2] Robert Hare's Electric Furnace. C. A. Doremus, Trans. Am. Electrochem. Soc., xiii, 1908, p. 347.

[3] Despretz, Comptes Rendus de l'Acad. des Sciences, vol. xxviii, p. 755, and vol. xxix, pp. 48, 545, 712 (1849).

F. A. J. FitzGerald, Electrochem. and Met. Ind., iii, 1905, p. 215.

from a battery of 600 Bunsen cells; and Pichou,[1] who described, in 1853, a furnace, heated by a series of electric arcs. The furnace, which was probably never constructed, was intended for the reduction of metallic ores. Joule and Thomson also attempted to utilize the high temperature of the electric arc.

Until the invention of the dynamo, in 1867, experiments requiring any considerable amount of electrical power could only be conducted at great trouble and expense by means of electric batteries. Sir W. Siemens, with the aid of the dynamo, began, in 1878, to experi-

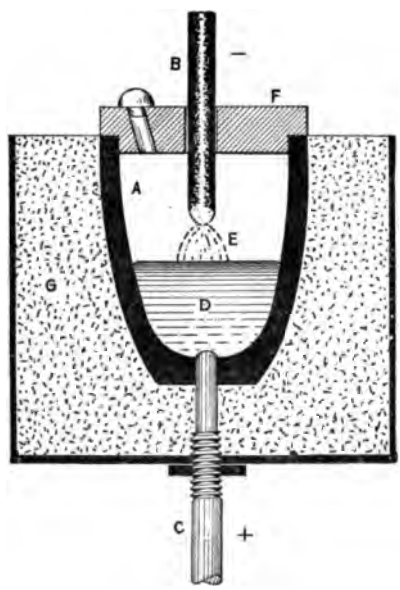

FIG. 2.—Siemens' vertical arc furnace.

ment on the electric furnace, which he used mainly for melting metals. The form of furnace usually associated with his name[2] is shown in Fig. 2, and consists of a crucible *A* of graphite or similar refractory material, and of two rods, *B* and *C*, for leading in the current. The lower rod was made of metal, and fitted into the base of the crucible, while the upper was of carbon, or a water-cooled metal tube, and was actuated by an automatic regulating device to maintain the arc *E* of a constant length. The metal to be melted was placed in the crucible, making electrical contact with the lower

[1] Mentioned by Andreoli, Industries, 1893, see Borchers' Electric Smelting.
[2] W. Siemens' English patent, 2,110, 1879, see Borchers' Electric Smelting.

pole *C*; then the rod *B* was lowered until an arc was started between this rod and the metal in the crucible. In the illustration the metal is shown melted, at *D*, as it would be at the end of the operation.

The positive pole is always hotter than the negative pole, and for this reason the metal to be melted is made the positive pole of the arc. A lid, *F*, was provided with a hole for observing the operation, or making additions to the charge, and a protecting covering *G*, was arranged to reduce as far as possible the radiation of heat from the crucible.

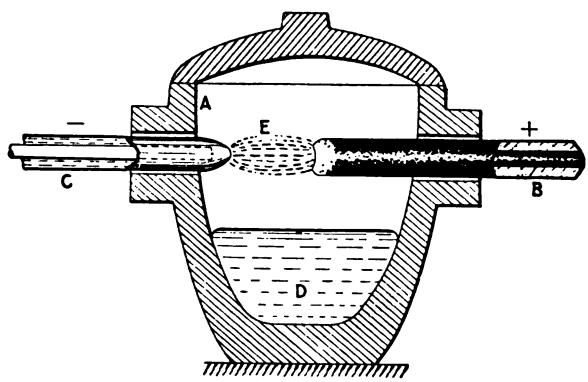

FIG. 3.—Siemens' horizontal arc furnace.

In this furnace he was not only able to melt several pounds of steel and platinum, but even to vaporize copper which had been packed with carbon in the crucible.[1]

Siemens also invented a furnace having horizontal electrodes, as shown in Fig. 3.[2] In this furnace the arc passes between the two electrodes *B* and *C*, and heats, by radiation, the material contained in the crucible. In both furnaces he provided water-cooled copper electrodes for the negative pole of the arc, to avoid the wasting that takes place when carbon electrodes are used. In Fig. 3, the negative electrode, *C*, consists of a copper tube, closed at one end, and cooled by water, which is introduced by a smaller pipe inside it. The positive electrode, *B*, is a hollow carbon rod, and through it a neutral or reducing gas, can be introduced into the furnace.

In 1883, Faure patented an electric furnace of the resistance type, the heat being generated by the passage of the current through

[1] Siemens and Huntington, British Assoc. for the Adv. of Science, 1882, pp. 496–98.

[2] W. Siemens' English patent, 4,208, 1878, see Borchers' Electric Smelting.

solid conducting rods imbedded in the hearth of the furnace, on the same principle as the electric cooking stove.

The resistance type of electric furnace was made a commercial success by the brothers, E. H. and A. H. Cowles, whose inventions were described in 1885.[1] Their furnace was heated by passing an electric current through coarsely powdered charcoal or gas carbon. This new method was used for a variety of purposes, one of these being the production of aluminium alloys by heating a mixture of alumina and carbon with copper or some other alloying metal.

Fig. 4 represents the Cowles furnace for aluminium alloys. It consists of a rectangular brick chamber fitted with inclined carbon electrodes, *A* and *B*, and filled with the mixture of alumina, carbon

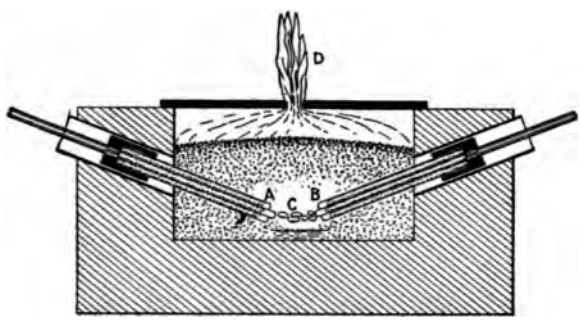

FIG. 4.—Cowles' furnace for aluminium alloys.

and copper. The electric current flows between the electrodes through some pieces of retort carbon, *C*, and thus heats the charge, which, when heated, carries part of the current. The gases resulting from the chemical reaction escape and burn at *D*, and the molten alloy collects at the bottom of the furnace.

In 1886, Hall,[2] and Héroult[3] patented processes for the production of aluminium, and their processes, as now used, consist in passing an electric current through fused compounds of aluminium; the elec-

[1] Dr. T. Sterry Hunt, Amer. Inst. Min. Eng. (Sept. 16, 1885), vol. xiv, p. 492. Prof. C. F. Mabery, Amer. Assoc. for the Adv. of Science, Aug. 28, 1885, vol. xxxiv, p. 136. E. H. and A. H. Cowles, U. S. patents 319,795 (1884), see Borchers' Electric Smelting; and 324,658 and 324,659 (1885), see Richards' Aluminium.

[2] C. M. Hall, U. S. patents 400,766 and 400,664, April 2, 1889 (applied for July 9, 1886), see Richards' Aluminium.

[3] Paul Héroult, French patents 175,711, April 23, 1886, and 170,003, April 15, 1887, see Richards' Aluminium.

trolytic action of the current liberates the aluminium from these compounds, and the heat of the current keeps the material fused.

Fig. 5 may be considered to represent either the Hall or the Héroult furnace. Each of these consists of an iron tank, *A*, lined with carbon, *B*, and provided with a number of carbon rods, *C*, which dip into the fused electrolyte, *E*, contained in the tank. The carbon rods are made the positive and the tank the negative electrode. The electrolyte consists chiefly of cryolite, and alumina—the purified ore of aluminium—is added at intervals. The electrolytic action of the current splits up the alumina into aluminium and oxygen; the former collects in the fused state at the bottom of the

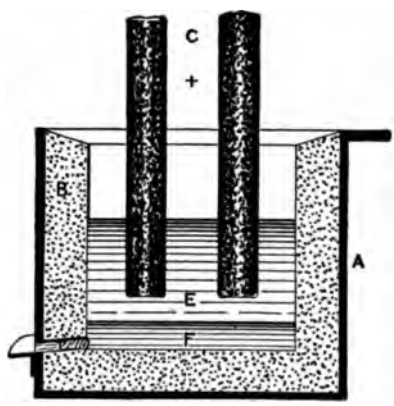

FIG. 5.—Aluminium furnace.

tank, at *F*, while the latter is liberated in contact with the carbon rods, and consumes them, the loss of carbon being about equal in weight to the aluminium produced.

It will be noticed that, while the apparatus resembles Siemens' vertical-arc furnace in general appearance, no arc is formed in this case. The current flows through the electrolyte from the carbon rods to the melted aluminium, and in doing so produces enough heat to keep the cryolite in a state of fusion, at a temperature of nearly 900° C. (1,600° F.).

All the aluminium at present produced comes from the electric furnace. During the year 1905 the output of aluminium in the United States alone amounted to 10,000,000 lb., whereas, in 1885—before the electrical process was invented—it was only 283 lb. In 1911 the total production of aluminium was 90,000,000 lb.

The next stage in the history of the electric furnace is marked by the classical experiments and researches of Henri Moissan.[1] These researches were commenced in 1892, and had for their objective the manufacture of artificial diamonds. Moissan worked in accordance with scientific method, and, although his researches were not conducted with a view to technical results, his unique experiments have given a great impetus to the commercial use of the electrical furnace, as well as establishing on a scientific basis our knowledge of chemistry at the high temperatures used in the electric furnace.

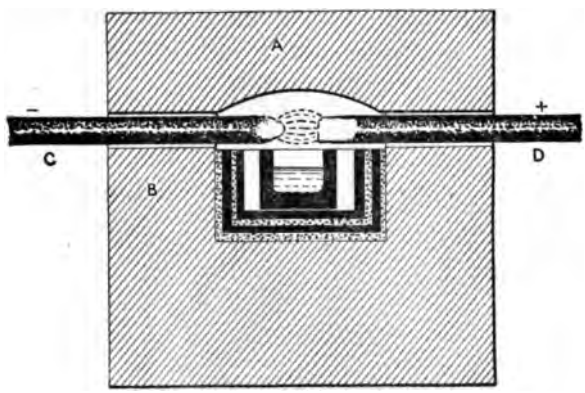

FIG. 6.—Moissan's furnace.

Fig. 6 indicates the type of furnace he usually employed. It consists of two blocks of limestone, *A* and *B*, and two carbon rods, *C* and *D*, to which the electrical connections are made. A cavity is hollowed out in these blocks, and the material to be heated is placed in a crucible of carbon or magnesia. As even lime melts and volatilizes at the temperature of this furnace, a lining of alternate layers of carbon and magnesia was arranged as shown in the figure, in order to withstand, as far as possible, the heat of the arc.

In some of these experiments Moissan converted two or three hundred electrical horse-power into heat in a furnace of only a few inches internal dimensions. At the enormously high temperature of his furnace everything melts or turns to vapor. Carbon is the most refractory substance known, and even that turns to graphite

[1] H. Moissan, Description d'un nouveau four electrique, Comptes Rendus de l'Acad. des Sciences, vol. cxv, p. 1031, Dec., 1892.

H. Moissan, Le Four Electrique, Paris, 1897.

H. Moissan, The Electric Furnace, trans. by Victor Lenher, 1904.

and volatilizes; magnesia, another very refractory substance, melts at the highest temperature of the furnace and vaporizes. Lime, quartz, and alumina all melt and boil in the furnace. Gold, copper, iron, and, in fact, all the metals can also be melted and boiled in the electric furnace.

An improved form of the Moissan furnace[1] has recently been described, in which an electric current of 1,000 amperes at from 50 to 150 volts is employed. In the case of direct current this would mean 70 to 200 h.p., and, while this is not quite as much as Moissan sometimes used, it is more than is often available for scientific experimental work. In such a furnace it is easy to produce a temperature more than double that usually obtainable by the combustion of fuel, and it is, therefore, an invaluable apparatus in the hands of the metallurgist and the chemist.

Moissan also experimented on the reduction of metals from their oxides, and found, as had, indeed, been stated by C. F. Mabery[2] in 1885, and by Dr. W. Borchers, in 1891, that carbon will reduce any metal from its oxide at the temperature of the electric furnace. Not only will carbon reduce any metal from its oxide, but at this high temperature carbon will also combine with the metal itself to form a carbide. The production and properties of many of these carbides were studied by Moissan.

One of the most spectacular of his experiments was the production of the diamond. This is a crystallized form of carbon, and if a suitable solvent were available it should be possible to crystallize carbon as diamonds. Moissan found such a solvent in iron and certain other metals. In the electric furnace these metals dissolve notable quantities of carbon, and by cooling them under suitable conditions Moissan was able to obtain some of the carbon as microscopical diamonds, which he isolated by dissolving the metal in acids. The present writer, in common with other experimenters, has repeated this production of the diamond, and has also seen what appeared to be a diamond, which had been found imbedded in a piece of iron or steel produced by ordinary smelting methods.

Although diamonds are not yet manufactured in ton lots, Moissan's researches on the conversion of carbon into graphite, and on the production of calcium carbide, have been followed by important commercial developments. The formation of calcium carbide in the electric furnace was independently achieved in 1892 by T. L. Willson,

[1] Engineering, March 23, 1906, vol. lxxxi, p. 381.

[2] C. F. Mabery, Amer. Assoc. for the Adv. of Science, xxxiv, p. 136.

who developed the manufacture of the carbide on commercial lines.[1]

Fig. 7 illustrates the Willson carbide furnace, consisting of an iron crucible, *A*, the base of which has a carbon lining, *D*. The crucible is connected to one cable from the dynamo or transformer, while the other cable is connected to a large carbon electrode, *B C*, suspended within the crucible. The arc being started between *C* and *D*, the charge of powdered lime and coke is fed in around *C*, and in the heat of the arc the lime is reduced by means of the coke to the metal calcium, and this in turn reacts with more coke to form a carbide. These reactions may be represented by the following chemical equations, which also indicate the relative amounts of lime and coke to use in the charge:

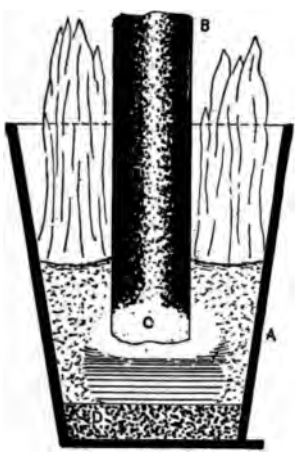

FIG. 7.—Willson's carbide furnace.

$$CaO + C = Ca + CO.$$
$$Ca + 2C = CaC_2$$

The calcium carbide, thus formed, is fusible at the temperature of this furnace, and forms a pool beneath the electrode, *B C*, and by gradually raising this electrode, a mass of carbide is built up. When the crucible is nearly filled, the operation is stopped and the crucible allowed to cool before turning out the block of carbide.

The carbonic oxide produced by the reaction escapes and burns in the upper part of the crucible, as is indicated in Fig. 7. Many other forms of carbide furnaces have been devised, and are now being operated on a large scale, some of these being intermittent, like the Willson furnace, while others are continuous in action. The world's production of calcium carbide amounted in 1904 to 90,000 tons, and in 1909 to 250,000 tons. The value of calcium carbide depends, as is well known, upon the ease with which it acts upon water to form the valuable illuminating gas, acetylene; its price in 1910 was $70 per ton.

Another important carbide, produced in the electric furnace, is carborundum, a carbide of silicon, SiC. The discovery of carborun-

[1] Industries and Iron, 1896, vol. xx, p. 322.
V. B. Lewes, "Acetylene," p. 16. states that Willson was the first to (intentionally) produce calcium carbide in the electric furnace.

dum by E. G. Acheson in 1891 is described by himself in an interesting lecture on "Discovery and Invention."[1] Mr. Acheson was attempting to harden clay by impregnating it with carbon in an improvised electric furnace. After the experiment he noticed a few bright specks at the end of the carbon electrode. These specks were found to be hard enough to cut not only glass, but even the diamond itself, and were the origin of the important carborundum industry.

Carborundum is made by placing a mixture of sand and coke with smaller amounts of saw-dust and salt in a fire-brick chamber, and passing an electric current through a core of carbon placed in the

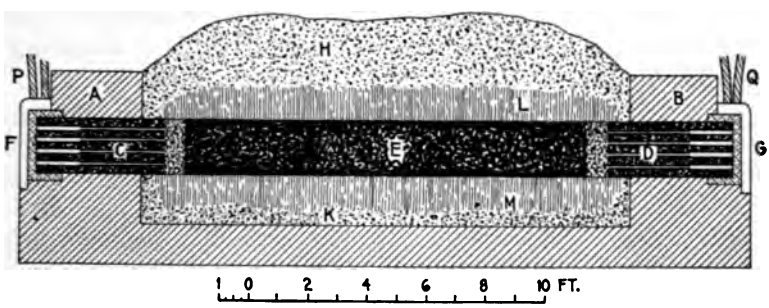

FIG. 8.—Acheson's carborundum furnace.

middle of the charge. The sand, in the charge, becomes reduced to silicon, and combines with carbon to form carborundum, which, at the high temperature (over 2,000° C.) of the furnace, assumes a beautiful, iridescent, crystalline form, and is of such extreme hardness that it has proved to be a very valuable abrasive. It is now widely used as a grinding agent in the metal trades and other industries, and it is also useful as a refractory lining for electric and other furnaces, and as a deoxidizing addition in the manufacture of steel.

The furnace employed[2] is shown in Fig. 8, and consists of two permanent end walls, *A* and *B*, which support large bundles of carbon rods, *C* and *D*, in heavy bronze holders. The current is carried between *C* and *D* by a core of broken carbon, *E*, and as the charge does not fuse, this core remains in position until the end of the operation. *LM* is the carborundum, which surrounds the core, and *HK* is un-

[1] The Electric Journal, Pittsburg, 1906.

[2] The Carborundum Furnace, F. A. J. FitzGerald, Electrochemical Industry, vol. iv, p. 53, 1906.

converted charge which acts as a heat-retaining cover. A layer of brilliant graphite was usually found between the core and the crystalline carborundum. This graphite resulted from the decomposition of the carbide in the hottest part of the furnace. From this observation Acheson evolved the artificial production of graphite, which he patented in 1896.[1] It consists in heating coke, anthracite or other form of carbon containing a small amount of iron oxide or certain other substances. The iron and other impurities in the carbon are volatilized at the high temperature of the electric furnace and leave the carbon very pure and converted into graphite. As much as 1,000 electrical horse-power is consumed in one of these furnaces, producing a temperature of over 2,200° C.

The manufacture of carborundum, graphite, siloxicon and other products of the Acheson electric furnaces at Niagara is more fully described in Chapter XI.

The continued fertility of soils depends largely upon the nitrogen, which is removed in the crops, being restored to them in the form of nitrate manures; it being an unfortunate circumstance that plants are unable to utilize the free nitrogen of the air. The extensive deposits of Chile saltpeter, of which more than 2,000,000 tons are consumed annually, form the main source of these manures, as well as of nitric acid and other nitrates. In view of the small number of important deposits and the rapid increase in consumption, it is of very great importance that some other source of nitrates should be discovered. Naturally one turns to the unlimited supply of nitrogen in the atmosphere.

The combination of oxygen and nitrogen in the electric arc was discovered by Priestley and Cavendish more than 100 years ago, but some investigations by Crookes in 1893 appear to have drawn attention to the possibility of utilizing this reaction for the manufacture of nitric acid and nitrogenous fertilizers from air. A number of processes were patented in the years 1895-96, and the Bradley and Lovejoy process was tried at Niagara Falls on a commercial scale in 1902. The Birkeland and Eyde process, invented in 1903, was the first to attain commercial success, and is now in operation in Norway. Other processes have since been invented, notably those of Pauling and of Schönherr, and at the present time nitric acid and nitrates for fertilizers are made electrically from the atmosphere on a very large scale, several hundred thousand horse-power

[1] The Conversion of Amorphous Carbon to Graphite, F. A. J. FitzGerald, Journal of the Franklin Institute, Nov., 1902.

being employed for this purpose. Another source of nitrogen for the soil is calcium cyanamide,[1] which is the result of a direct reaction between calcium carbide and nitrogen. This process was discovered about 1895 but was not developed commercially until about 1905. It is now being operated on a large scale, more than 100,000 tons a year being produced.

Calcium carbide has been one of the most important products of the electric furnace, and its manufacture still consumes more electrical power than that of any other product. It was a financial crisis in the carbide industry that led to the electric smelting of iron, steel, and the other iron alloys.[2]

Several years ago the production of calcium carbide became larger than the demand, and this forced some manufacturers to turn their attention to other methods of utilizing their electric furnaces. With this object experiments were made in France and elsewhere about the year 1900 on the production of ferro-chrome,[3] ferro-silicon, and the other ferro-alloys; and these experiments were so successful that not only have the new processes been able to compete with existing methods, but, in many cases, the electric product has captured the market.

The ferros are alloys of iron, with manganese, chromium, silicon, or some other metal, and they usually contain a notable amount of carbon, being, in fact, cast-iron, in which part of the iron has been replaced by another metal. Some of these are used in the production of open-hearth and Bessemer steel, and others for the production of special alloy steels. Ferro-nickel, ferro-tungsten, ferro-titanium and ferro-molybdenum have also been employed in steel-making.

The carbide furnaces, which were lined with carbon, were satisfactory for the production of these carburized materials, but certain changes were necessary before they could be used for the manufacture of steel. In France, Héroult,[4] and in Sweden, Kjellin[5] succeeded in adapting the furnace to the production of good quality steel from scrap steel, pig-iron, etc.; and good crucible and special

[1] See page 308.

[2] Albert Keller, The Application of the Electric Furnace in Metallurgy, Journ. Iron and Steel Inst., 1903, No. 1, p. 161.

[3] Ibid., pp. 162 and 166–169.

[4] Héroult Steel Furnace. Electrochemist and Metallurgist, vol. i (1901), p. 196; Electrochemical Industry, vol. i (1902–03), pp. 63, 287, 449.

[5] Kjellin Steel Furnace. Electrochemist and Metallurgist, vol. i (1901), p. 90; Electrochemical Industry, vol. i (1902–03), pp. 141, 376, 462, 576.

alloy steels have for some years been produced commercially in the electric furnace. The original patents of these pioneers of electric steel-making were taken out about the year 1900,[1] just 100 years after the discovery of the voltaic battery.

The origin of the electric smelting of iron-ores was, however, somewhat earlier than this. In the year 1898 Captain Stassano,[2] in Italy, patented his electrical furnace for smelting iron-ores, and in the following year demonstrated the working of his process. Quite a sensation was produced by his experiments, as although it was not surprising to learn that iron-ores could be smelted by electricity, the ordinary price of electric power was so high that it appeared preposterous to attempt to use it in competition with coke in the blast-furnace.

It is a matter of general knowledge that the retail price of any commodity is higher, and sometimes even several times as high as the wholesale price, or the cost of production; but it was probably not generally realized until recently that the small consumer of electric light pays about 100 times as much for electricity as the actual cost of producing it from a good water-power. This enormous difference had given an exaggerated idea of the costliness of electrical power, and was, no doubt, largely responsible for the skepticism with which Stassano's early experiments were received. These experiments of Stassano impressed on many minds the financial possibility of electric smelting in general, and a large crop of such processes followed.

In view of the great importance to Canada of developing the electric smelting of iron-ores, the Canadian Government appointed in 1903 a Commission under Dr. Haanel to report on the electrothermic processes in operation in Europe for smelting iron-ores and making steel. The Commission visited Europe in 1904 and saw the Héroult, Keller and Kjellin furnaces in commercial operation making steel and ferro-alloys. At Dr. Haanel's request the production of pig-iron from the ore was also demonstrated in the Héroult and Keller furnaces. A voluminous report[3] was published after the return of the Commission, and Dr. Haanel was so well satisfied

[1] The Colby induction steel furnace was patented in 1890. See Electrochemical Industry, vol. iii (1905), pp. 134, 299, 341, and vol. v (1907), p. 232.

[2] Stassano Steel Furnace. Electrochemist and Metallurgist, vol. i (1901), p. 230; Electrochemical Industry, vol. i (1902–03), pp. 247, 363.

[3] Report of the Commission appointed to investigate the different electrothermic processes for the smelting of iron-ores and the making of steel in operation in Europe. Ottawa, 1904.

with the possibility of smelting iron-ores electrically in countries where coal was scarce and water-power was abundant that he obtained a further grant from the Government, and with the help of Paul Héroult carried out a series of experiments during the spring of 1906 at Sault Ste. Marie on the electric smelting of Canadian iron-ores.[1]

After Dr. Haanel's demonstration of electric ore-smelting, plants for the commercial production of pig-iron in the electric furnace were erected at Héroult-on-the-Pitt, California, and at Welland in Ontario, Canada. The Californian furnace was started on the 4th of July, 1907, but the furnace was not satisfactory and two years were spent in experimental work before a successful furnace was built by Prof. D. A. Lyon. The production of pig-iron was less likely to be commercially successful at Welland than in California, and the Welland plant was soon utilized for the production of ferro-alloys.

Sweden and Norway are countries particularly suitable for electric iron-smelting, and experiments were started in Sweden by Messrs. Grönwall, Lindblad and Stälhane shortly after the publication of Dr. Haanel's work. Their first satisfactory furnace, one of 700 h.p., was erected at Domnarfvet in 1908, and in 1910 a furnace of 2,500 h.p. was built at Trollhättan in Sweden and is in commercial operation. Still larger furnaces have been built both in Sweden and in Norway and the electric iron-smelting industry is now well established in these countries.

The production of steel from pig-iron and steel scrap in the electric furnace has been in commercial operation since 1902, but it was soon found that furnaces of the Héroult type could be more usefully employed for finishing steel that had been made in a Bessemer converter or open-hearth furnace and which was then transferred while still molten to the electric furnace. A 15-ton Héroult furnace has been in operation for this purpose in south Chicago since 1908. The Kjellin induction furnace, although very satisfactory for melting steel, could not be used for refining it; but the invention in 1907 of the Rodenhauser furnace, which combines induction and resistance heating, has overcome this difficulty and has greatly extended the use of the induction steel furnace.

The direct production of steel from iron-ore in the electric furnace,

[1] Report on the experiments made at Sault Ste. Marie, Ont., under Government auspices, in the smelting of Canadian iron ores by the electrothermic process. Ottawa, 1907.

which was started by Stassano in 1898, has not made much headway; but a good deal of experimental work has been done lately, among others by J. W. Evans and the author, and the outlook, in certain directions, seems promising.

Attempts to smelt zinc-ores electrically were made by Cowles in 1885, and the original de Laval furnace was patented in 1902. Since that time many attempts have been made with partial success to solve the problem. A modified de Laval furnace is in operation in Sweden but the results obtained are far from satisfactory. W. McA. Johnson, who has worked on the problem for ten years, now claims that he has solved it. A research was started in the author's laboratory for the Canadian Government in 1910 and is still in progress, on a larger scale, in the Government works at Nelson, B. C.

Recently the electric furnace has been employed in the metallurgy of copper and of nickel and has been found satisfactory for certain operations, but not for smelting the arsenical silver-ores of cobalt.

CHAPTER II

DESCRIPTION AND CLASSIFICATION OF ELECTRIC FURNACES

The electric furnace may be described as an appliance in which materials can be submitted to a high temperature by the dissipation of electrical energy. This definition does not include all cases of electrical heating; and with advantage might be limited to the production of temperatures above a red heat. In a number of instances such as the production of sodium and aluminium, the electric current is required mainly for isolating the metal by electrolysis, and only incidentally for producing heat. These processes are usually considered to be furnace operations, because a high temperature is produced, and electrolysis should be classed as a furnace process when fused anhydrous salts are employed, excluding the more familiar electrolytic processes in which aqueous electrolytes are used.

Heat is produced whenever an electric current encounters any resistance to its flow; the energy, producing the current, being transformed into heat.[1] Even the best electrical conductors oppose some resistance to the flow of an electric current, and work must consequently be done in maintaining the current. If an electric circuit is made, in part, of a good conductor (such as a short, stout copper cable) and, in part, of a poor conductor (such as a thin rod of carbon) the greater part of the heat will be produced in the poor conductor, which may even become red hot, while the remainder of the circuit remains cool.

Fig. 9 represents such a circuit: *D* is a dynamo, or electric generator; *B* and *C* are stout copper wires or cables, and *R* is a carbon "Resistance" or "Resistor"; that is to say, an electrical conductor made of carbon that offers a considerable resistance to the flow of the current. The windings in the dynamo are of copper, and these and the cables *B* and *C* are so stout, that the resistance they offer to the flow of the current is only small. In this circuit, mechanical work is constantly required to turn the dynamo, and this work is converted into heat mainly in the resistor *R;* and to a less extent in the conductors *B* and *C*, and the dynamo *D*. Such an arrangement

[1] A part of the energy is sometimes changed into chemical energy or into other forms of electrical energy.

may represent an electric resistance furnace operated by a dynamo. The work spent in driving the dynamo, is converted into heat, and by giving to the furnace a far higher resistance than that of the remainder of the circuit, we can obtain nearly all the heat in the furnace; only a small proportion being wasted in the dynamo and conducting cables. The amount of heat developed depends upon the strength of the electric current, as well as on the amount of resistance it meets. By increasing the furnace resistance, the current is decreased; consequently, beyond a certain point, less heat will be produced in the furnace.[1]

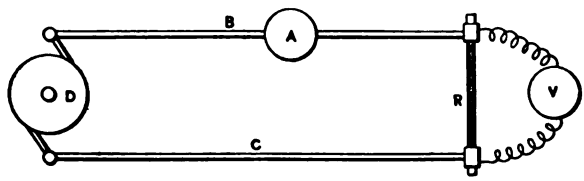

FIG. 9.—Electric circuit.

An electric current is measured in "amperes," the electrical pressure producing the current is measured in "volts," and the electrical resistance of a conductor is measured in "ohms." Using these units, the electric current flowing around a circuit is equal to the electrical pressure or E.M.F. (electromotive force) driving it, divided by the electrical resistance of the circuit.

When an electric current flows through a resistor, as in Fig. 9, the amount of heat produced is proportional to the resistance, and to the square of the current; or, to the E.M.F. and the current. Taking as a unit the heat that would raise the temperature of 1 grm. of water from 0° C. to 1° C., it is found that—

$$H = 0.24 I^2 R\, t = 0.24\, E\, I\, t,$$

where—

H = heat produced in gram centigrade units,
I = current in amperes,
R = resistance in ohms,
E = electromotive force in volts,
t = time in seconds.

[1] For a constant total voltage, the heat produced in the furnace will be a maximum when the furnace resistance is one-half of the total resistance in the circuit. This would not be a desirable condition, however, for then as much heat would be wasted in the electric generator and the leads, as was produced and used in the furnace.

In the circuit shown in Fig. 9 the current I would be measured in amperes by means of an ammeter, A, placed in one of the cables; the E.M.F., E, in volts by means of a voltmeter, V, connected to the terminals of the resistor; and the resistance R, in ohms, would be deduced from the relation $IR=E$. The above considerations are only exact in the case of an electric current flowing steadily in one direction; in the case of alternating currents an electrical inertia is observed which modifies these results.[1]

In the arc-furnace, the electric current encounters not only an inert resistance, but also, an opposing electrical force. Both the resistance and the opposing electrical force cause the energy of the current to be turned into heat,[2] and to contribute to the heating of the furnace. A similar opposing electrical force is present in an electrolytic furnace, such as is used for the production of aluminium. In the latter case, however, the work done in overcoming this force, is turned into chemical energy (isolating aluminium from alumina) instead of into heat. In most furnace operations, chemical and physical changes are produced, and these increase or diminish the amount of heat liberated in the furnace.

An electric furnace consists of the following essential parts and accessories:

(1) **Some Conducting Material Heated by the Passage of the Current.**—This may be a vapor, as in the electric arc; or a solid, such as coke; or a liquid, such as molten slag or molten steel.

(2) **An Envelope of Refractory Material.**—The walls, floor and roof of a furnace are needed to conserve the heat, to retain the charge, to exclude the air and to support the electrodes and the charging and discharging apparatus.

(3) **Electrodes, or Conductors for bringing the Current into the Furnace.**—Carbon rods are usually employed for this purpose. They are subjected to the heat of the furnace at one end, and at the other end must be sufficiently cool to permit of making electrical contact by means of special holders with the cables bringing the current to the furnace. In some furnaces electrodes are not needed, the current being generated by induction in the furnace itself.

(4) **Electrode Holders.**—These are usually metal clamps for holding and making electrical contact with the carbon electrodes; provision being made for preventing the excessive heating of the holder.

[1] See page 123, Chapter V.

[2] Part of the electrical or thermal energy is used in vaporizing carbon from the electrode.

(5) **Charging and Discharging Facilities.**—Some furnaces are intermittent in action, the charge being added, heated in the furnace and then removed, before a fresh charge can be introduced. Other furnaces are continuous in action, involving the periodic, or continuous additions of the raw material, and removal of the products.

Apart from the furnace itself, the following operating factors have to be considered:

(6) **Source of Electric Current.**—The electric current is produced by means of a dynamo or electric generator, and as it is usually supplied at a higher voltage than is suitable for the furnace, a transformer may be required to reduce the voltage; the amount of current being simultaneously increased almost proportionately to the reduction in the voltage. The current may be alternating, or direct, but an alternating current is usually preferred, as it can be transformed more readily from one voltage to another. In cases where electrolysis is required, as in the production of aluminium or sodium, the direct current can alone be used.

(7) **Cables, Measuring Instruments, and Regulating Devices.**—Cables are used for bringing the electric current from the transformer or dynamo to the furnace. Measuring instruments, such as ammeters, voltmeters and wattmeters are used for measuring and recording the current, electromotive force and electrical power supplied to the furnace. Regulating devices are required for advancing the electrodes as they are consumed in the furnace, and for regulating by this means, or in some other way, the amount of current flowing through the furnace.

CLASSIFICATION

The usual classification of electric furnaces depends primarily upon the nature of the resistor used to develop the heat. Thus there are arc-furnaces, in which the heat is developed in the electric arc; and resistance furnaces, in which the heat is developed by the passage of the current through a solid or liquid resistor. The classification may depend, also upon the manner in which the heat is transmitted to the charge; thus in arc-furnaces the heating may be direct, as in Siemens' vertical-arc furnace, in which the metal to be melted forms one pole of the arc; or indirect, as in his horizontal-arc furnace, where independent electrodes are employed, and in which the heat is transmitted from the arc to the charge by radiation and conduction.

In resistance furnaces the charge to be heated may itself consti-

tute the resistor, or else an independent resistor may be employed. The latter nearly always consists of a solid core, usually of carbon, and it may be surrounded by the charge that it is to be heated, or may be imbedded in the walls of the furnace. A charge that is to be heated directly by the passage of the current, may be either solid or liquid, and in the case of a liquid charge, the electric current may produce heat merely, or may also produce electrolysis.

The following classification is based on these considerations, and includes examples of each class.

ARC FURNACES

The heat is produced by one or more electric arcs.

(1) **Independent-arc Furnaces.**—The arc is independent of the charge to be heated, being formed between two or more movable

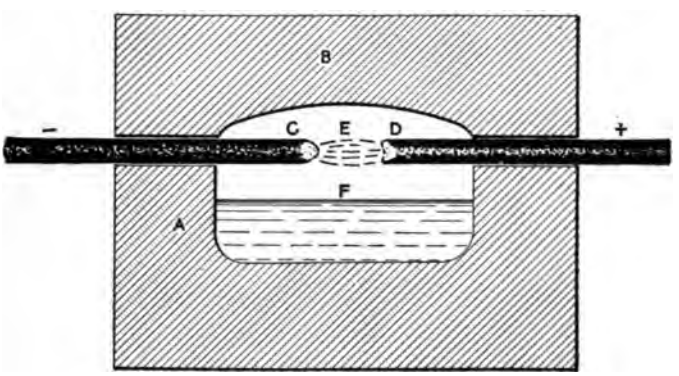

FIG. 10.—Independent arc furnace.

electrodes. The charge is heated by radiation from the arc, which is usually horizontal.

Fig. 10 shows such a furnace, consisting of a refractory chamber, *AB*, in which an arc, *E*, is formed between the movable carbon electrodes *C* and *D*; the material to be heated being shown melted at *F*.

Moissan's furnace, Fig. 6, Siemens' horizontal-arc furnace, Fig. 3, and Stassano's steel-making furnace are examples of this class. The Stassano furnace, Fig. 109 consists of a chamber lined with magnesia bricks, and provided with three carbon electrodes, between which a three-phase arc plays. The ore or other material

is placed in the chamber below the level of the arc, and is heated by radiation.

(2) **Direct-heating-arc Furnaces.**—The charge in the furnace forms one pole of the arc and is thus heated directly as well as by radiation. The arc is usually vertical.

Fig. 11 represents an arc furnace in which the material *D*, to be heated, forms one pole of the arc. *A* is a chamber lined with

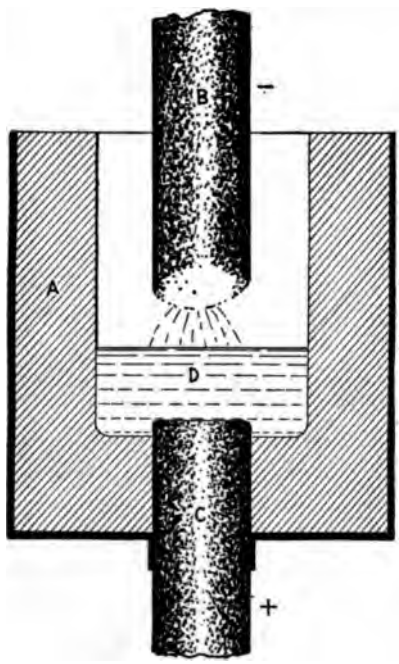

FIG. 11.—Direct-heating arc furnace.

refractory material, and *B* and *C* are the two electrodes: the upper one, *B*, is movable; the lower, *C*, is fixed, forming part of the bottom of the furnace, and making electrical contact with the charge *D*. The furnace is started by lowering *B* until it touches *D*, thus allowing the current to pass. *B* is then raised, forming an electric arc between *B* and *D*.

Siemens' vertical-arc furnace, Fig. 2, Willson's carbide furnace, Fig. 7, and the Keller furnace, Fig. 99, are examples of this class.

In each of these there is one movable electrode and one arc, and the hearth of the furnace is made conducting, serving to lead the electric

current to the molten charge in the furnace. The large Girod furnace, Figs. 97 and 98, has four movable electrodes and an equal number of arcs, but these are all connected in parallel, and are equivalent to one large electrode and arc; the voltage being that of a single-arc furnace.

The "Electro-Metals" steel furnace, Fig. 101, is in the same class, although the two arcs are not connected in parallel, but are operated by the separate phases of a two-phase current. In this case the voltage of the furnace is that of a single-arc furnace, and the bottom serves as one electrode.

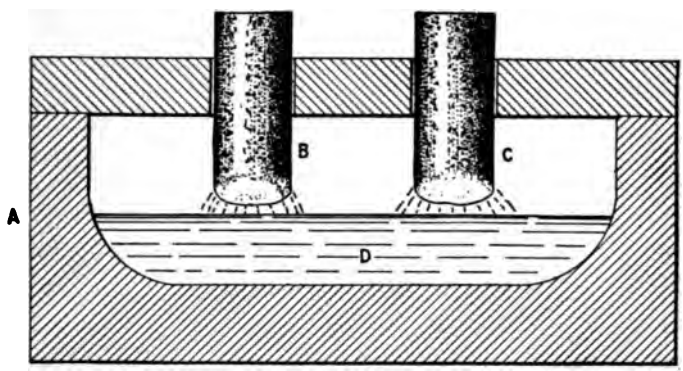

FIG. 12.—Direct-heating series-arc furnace.

Fig. 12 shows a direct-heating-arc furnace having two arcs in series. *A* is a chamber lined with refractory material, and *B* and *C* are two electrodes, which are both movable, and are connected to opposite poles of the electrical supply. The furnace bottom is not used as an electrode. As the arcs are in series, the furnace voltage includes that of both the arcs, and will generally be greater than in a single-arc furnace. It should be noted that a conducting-hearth furnace, in which the hearth forms one electrode, cannot have two arcs in series.

Examples of this class are the Héroult steel furnace, Fig. 93, the Willson carbide furnace, Fig. 121, and the alundum furnace Fig. 143.

The Héroult steel furnace, Fig. 93, consists of a chamber for containing the molten steel, with two vertical carbon rods dipping through holes in the roof. An arc is formed between each carbon rod and the fused charge; the current entering through one rod,

passing through the melted steel and slag, and returning through the other rod. The three-phase Héroult furnace, Fig. 94, is also an example, as the hearth is not an electrode, and as the electric current passes through two arcs in series.

It will be clear, from what has been said, that the direct-heating-arc furnaces form two distinct classes which are fundamentally different from a structural and electrical point of view. These may be termed (*A*) the single-arc or electrode-hearth class (Fig. 11), and (*B*) the double-arc class (Fig. 12). It would be impossible to place three or four arcs in series in a direct-heating-arc furnace unless it were provided with two hearths, electrically separate from each other.

Furnaces of this class are rather less convenient for scientific investigations than the independent-arc furnace; because the temperature is less easy to regulate, the arc is more difficult to control (when the charge consists of cold metal), and the carbon of the electrodes is apt to affect the chemical composition of the charge. On the other hand, the heat is transmitted more directly, thus obtaining a greater economy, and only one movable electrode is needed for each arc.

RESISTANCE FURNACES

In these, the heat is produced by the passage of the electrical current through some solid or liquid resistor. They may be divided into two main classes, in one of which a special resistor is provided, and in the other the charge itself constitutes the resistor. The second class may be subdivided into two; in one of these the current is used merely to heat the charge, while in the other it also produces electrolysis of the fused contents of the furnace. These will be treated, for convenience, as three independent classes.

I. Furnaces with Special Resistor

The resistor is a solid, and is imbedded in the walls of the furnace, or in the charge itself.

(1) **Furnaces with the Resistor Imbedded in the Walls.**—The furnace shown in Fig. 13 may be taken as an example; it consists of a tube *T*, often of porcelain, a spiral of platinum wire, and a heat-retaining envelope or covering. An electric current passes through the wire and heats it to any desired temperature below its melting-point, 1,755° C., or 3,200° F., and ultimately the tube and

its contents may be heated nearly to the same temperature. The substance to be heated is placed in the tube *T*. This arrangement is convenient for heating a material in any particular gas, and for observing the operation; as this can be done through glass or mica windows at the ends of the tube. Provision must be made for preventing the displacement and short-circuiting of the coils of wire when expanded by the heat. The temperature that can be attained in this furnace depends upon the refractory qualities of the tube and envelope, as well as on the melting-point of the platinum itself, and in practice the temperature attained would be far short of the melting-point of the platinum wire.[1]

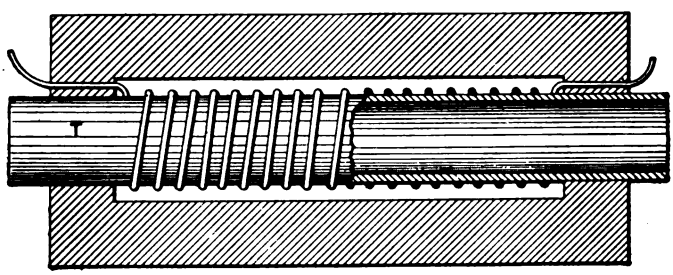

FIG. 13.—Electrical tube furnace.

This furnace is very convenient for laboratory experiments on a small scale, and at moderate temperatures, but its use is restricted by the high price of platinum.[2] A somewhat similar furnace in which the use of platinum has been avoided is shown in Fig. 14, which represents in sectional elevation, and in plan with the cover, *B*, removed—a small electrical crucible furnace, constructed at McGill University, and intended for melting small quantities of metals. It could, however, be made considerably larger, and be used for brass or steel melting. The furnace consists of two fire-clay blocks *A* and *B*, a crucible *C*, and carbon electrodes *D* and *E*. A receptacle is formed in the block *A* to contain the crucible and electrodes, and broken coke, *F*, is packed around them. The current passes from *D* to *E* through the coke, which becomes hot and heats the crucible

[1] A furnace, in which a crucible of fused quartz is surrounded by heating-coils of platinum strip, has been patented by W. H. Bristol, Electrochem., Ind., vol. v, p. 55.

[2] These furnaces can be obtained in several forms from dealers in chemical apparatus. A furnace suitable for heating a small crucible (Fig. 65) is described by Prof. H. M. Howe in his "Metallurgical Laboratory Notes," p. 37.

Similar furnaces are now made with heating coils of nichrome or other cheap metal or alloy.

and its contents. The temperature can be regulated by a rheostat in series with the furnace. The whole furnace is enclosed in a metal box with a thick asbestos lining to lessen the loss of heat.[1]

Furnaces of this type can now be made more satisfactorily by the use of a special resisting material called kryptol[2] which would replace the coke in the above description.

The Girod crucible furnace[3] is constructed on the same principle, and the Conley[4] ore-smelting furnace is a large-scale example of this class. One form of the Conley furnace consists of a shaft down

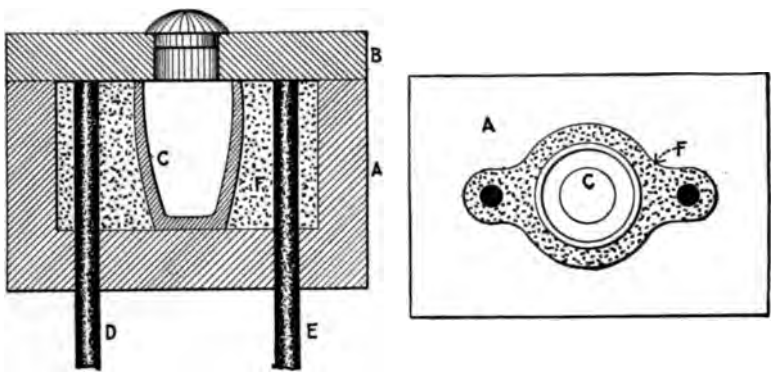

FIG. 14.—Electric crucible furnace.

which the ore passes and of carbon resistors imbedded in the walls of the furnace. The resistors are heated by the passage of a current, and communicate their heat to the ore passing over them.

Small tube furnaces heated by spirals of platinum wire, are very useful for experimental purposes, but commercial furnaces on these lines have been less successful. This is mainly on account of the difficulty of maintaining the resistors and adjacent parts of the furnace, and because, of the slow conduction of heat to the charge, and the large loss of heat through the furnace walls.

A rotary electric furnace, the inner walls of which serve as resistors, being sufficiently conducting when heated, has been patented by B. von Ischewsky.[5]

[1] Similar furnaces have been described by FitzGerald, Electrochemical Industry, vol. iii, pp. 55 and 135.

[2] Kryptol, see p. 291.

[3] Girod furnace, Electrochem. Ind., ii, 1904, p. 309.

[4] Conley furnaces, Electrochemical Industry, vol. i, p. 426 and vol. ii, p. 424.

[5] Ischewsky furnace, Electrochemical Industry, vol. v, p. 141.

Tube furnaces for experimental work, in which the tube is composed of graphite, amorphous carbon, or other conducting material which is heated by the passage of the electric current, have been employed by Potter,[1] Harker (Fig. 70),[2] Hutton,[3] Tucker,[4] and others. Some of these are described in Chapter VI.

Fig. 15 shows diagramatically the construction of a furnace devised by Thomson and FitzGerald,[6] which has a carbon resistor in the roof. This resistor consists of a number of specially shaped blocks of carbon which form an arch between the electrodes *B* and *C*.

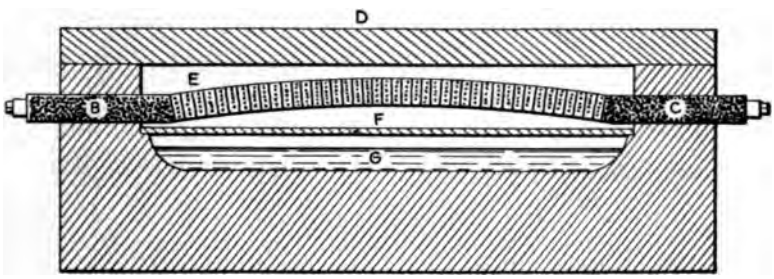

FIG. 15.—Thomson-FitzGerald resistance furnace.

This arch may form the roof of the furnace, or a false roof *F* of refractory tiles may be used to protect the resistor from any oxidizing gases that may be in the furnace. A heat-retaining layer of magnesia or similar material is placed above the arch and beneath the outer cover *D*.

G is the charge, which has been melted in the furnace, by heat which has radiated from *E* and has passed through the roof of tiles, *F*. Another form of this furnace is shown in Fig. 134.

(2) **Furnaces with the Resistor Imbedded in the Charge.**—The resistor is usually of carbon and horizontal.

The simplest example is Borchers' experimental resistance furnace,

[1] H. N. Potter, Electrochemical Industry, vol. i, pp. 187, 188 and 250; vol. ii, p. 203; vol. iii, p. 346, and vol. iv, p. 191.

[2] J. A. Harker, Electrochemical Industry, vol. iii, p. 273.

[3] R. S. Hutton and W. H. Patterson, Electrochemical Industry, vol. iii, p. 455 (1905).

[4] S. A. Tucker, Electrochemical Industry, vol. v, p. 227 (1907).

[5] Thomson and FitzGerald, Electrochem. and Metall. Ind., vol. viii, 1910, pp. 289 and 317.

[6] F. A. J. FitzGerald, "A New Electric Resistance Furnace," Trans. Am. Electrochem. Soc., xix, 1911, p. 273.

Fig. 16,[1] in which a thin pencil of carbon *C* is supported between stout carbon rods *A* and *B*, and the charge to be heated surrounds *C*. The current flows between *A* and *B* through *C*, and may raise the latter to a white heat. The charge serves in part as an envelope to retain the heat.

Acheson's carborundum furnace, Fig. 8, is the most important example of this class. In this furnace the conducting core is composed of granular carbon, and is supported and surrounded by the material to be heated. The furnace is efficient, because the heat is developed in the midst of the charge, which serves to retain it. The

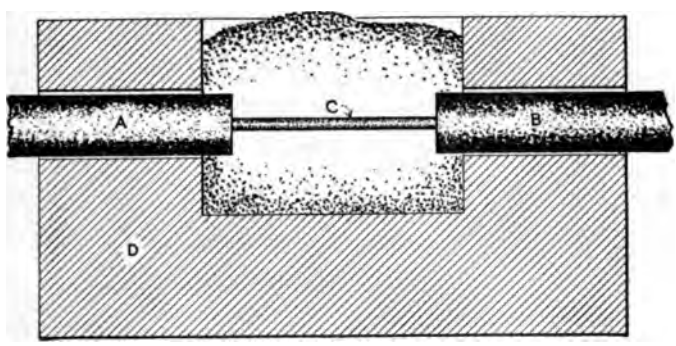

FIG. 16.—Borchers' resistance furnace.

temperature can also be exactly regulated by varying the current, while by using a number of cores, as in the siloxicon furnace, Fig. 120, it is possible to obtain a fairly uniform temperature throughout a large portion of the charge. On the other hand, when the furnace is in operation, it is impossible to regulate the resistance of the core,[2] and since this decreases considerably as the furnace becomes hotter, the current, if supplied at a constant voltage, may increase during the work of the furnace until it becomes too great for the dynamo, or transformer from which it is supplied; thus involving the use of special apparatus for regulating the voltage. As the material to be heated acts as an envelope to retain the heat, and as the charge does not become fused, the outer walls can be of the simplest description; merely serving to retain the charge in position. This furnace could not be used if the charge were to fuse, since the core would

[1] Borchers' Electric Smelting and Refining, 1897 Ed., Figs. 54, 55, 172, and Electrochemical Industry, vol. iii, p. 215.

[2] In small furnaces of this type the resistance of the core can be regulated, within moderate limits, by placing weights on the charge.

break and the operation would stop. The furnace is also essentially intermittent in action, as the charge cannot pass continuously through it, and on that account it is less efficient, since it must be allowed to cool between successive operations. Although a core is provided in this furnace to carry the current, a portion of the latter is undoubtedly carried by the charge itself.

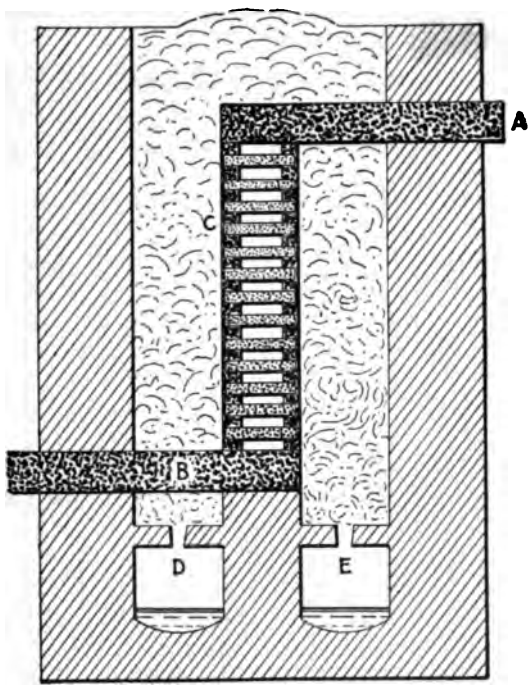

FIG. 17.—Tone's resistance furnace.

In the Cowles furnace for aluminium alloys, Fig. 4, the charge becomes partly fused, and no doubt serves to carry the current, but at the beginning of the operation the current is carried by a carbon core and so the furnace may be included in this class.

Tone's resistance furnace,[1] for the reduction of metals is shown in Fig. 17. The central resisting core *C* is placed vertically in order to permit of continuous charging, which would break down a horizontal core. It is constructed of carbon blocks, piled upon each

[1] F. J. Tone, U. S. patent 754,122, see Electrochemical Industry, vol. ii (1904), p. 111.

other so as to form a hollow square tower with openings in the sides, thus obtaining a high electrical resistance, and offering a large heating surface to the charge. *A* and *B* are carbon electrodes for making electrical connection with the core. The charge is fed in around *C*, and the reduced and melted metal flows through holes at the base of the furnace into the receptacles, *D* and *E*.

II. Furnaces without Special Resistor and without Electrolytic Action

In these furnaces the material to be heated forms the resistor, and may be solid or liquid, or may become molten during the operation. They may accordingly be divided into three classes:—

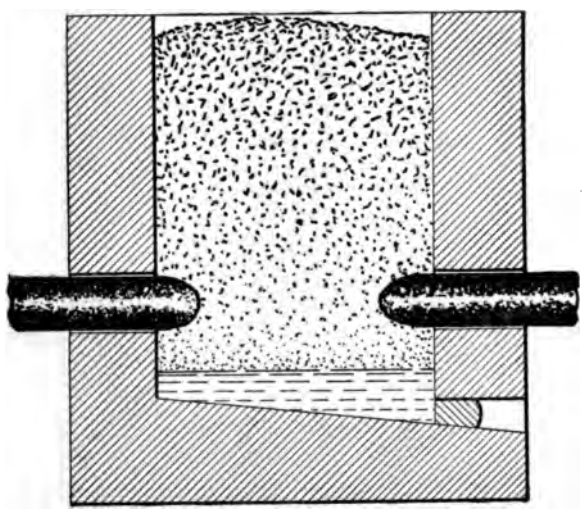

FIG. 18.—Shaft furnace with lateral electrodes.

(1) **Furnaces with Solid Resisting Contents.**—The material to be heated in these furnaces is sufficiently conducting to serve as a resistor, and remains solid during the operation of the furnace. Such furnaces are in consequence usually intermittent in action, the charge being heated and allowed to cool before it can be removed from the furnace.

The Acheson graphite furnaces, for the manufacture of graphite from anthracite coal, Fig. 115, and for graphitizing carbon electrodes, Fig. 116 may be mentioned as members of this class, although in the first a core is needed to carry the current when the furnace is

cold, and in the second the heat is mostly produced in the broken coke between the piles of electrodes. In each case the resulting graphite, being quite infusible, remains in position in the furnace, which must therefore be allowed to cool before the charge can be removed. Other examples are the Cowles zinc furnace, Fig. 126, the Johnson zinc furnace, Fig. 127 and the Thomson electric welding apparatus.

(2) **Furnaces with Melting Resisting Contents.**—The great majority of electric smelting furnaces are in this class. The current passes through the contents of the furnace, and these contents

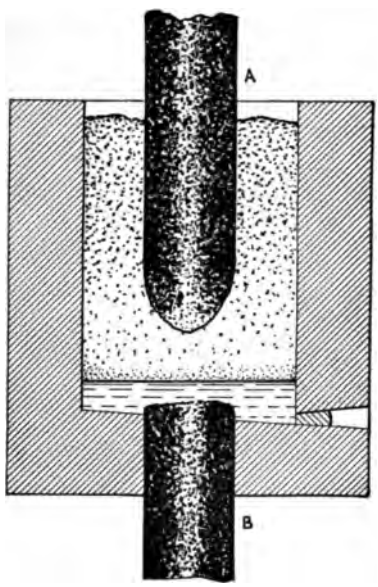

FIG. 19.—Shaft furnace with central electrodes.

melt and run down in the furnace. Such furnaces are almost invariably continuous in action, fresh material being supplied at intervals, and the molten products being tapped off while the furnace is running. Almost all materials, when in a melting condition, are sufficiently conducting to carry the current, although they may scarcely conduct at all when cold.

In these furnaces the current may pass between two or more lateral electrodes as in Fig. 18, or it may pass from one or more movable electrodes to a fixed electrode forming part of the bottom of the furnace as in Fig. 19. The furnace illustrated in Fig. 18,

consists of a chamber provided with lateral carbon electrodes and one or more tapping holes. It has a striking resemblance to a blast-furnace, the electrodes representing the tuyeres. The ore becomes heated and reduced to the metallic state in the upper part of the furnace, and the whole charge melts in the zone between the electrodes, and can be tapped out at the bottom. The current passes in part through the molten slag and metal in the bottom of the furnace, as well as directly through the melting ore between the two electrodes. In this type of furnace the current cannot be effectively regulated by moving the electrodes, and the walls are apt to melt where they touch the electrodes and the charge.

The Harmet furnace, Fig. 80, and the Swedish iron-furnaces, Figs. 90 and 92, are examples of this class. In the Swedish furnaces, the ore does not touch the walls at the points where the electrodes enter, and so corrosion is prevented.

Fig. 19 represents a furnace with one large electrode, hung in the middle, surrounded by the material to be heated. The other electrode, *B*, is fixed, forming part of the bottom of the furnace; and merely serves to make electrical contact with the fused material in the furnace. An advantage in this furnace is that the current can be easily regulated by raising or lowering the upper electrode. Moreover, the hottest part of the charge is in the middle of the furnace, thus leading to a greater economy of heat and to a longer life of the furnace walls. On the other hand, the upper electrode may need to be very long and will be corroded by contact with the ore and furnace gases.

The Héroult ore-smelting furnace, Fig. 78, the Haanel-Héroult furnace, Fig. 81 and the Salgues zinc furnace, Fig. 129, are in this class.

Comparing these with the arc-furnaces, it will be noticed that the furnace in Fig. 18 is similar to an independent-arc furnace, Fig. 10, and that the furnace in Fig. 19 resembles the electrode-hearth arc-furnace, Fig. 11. Another class of resistance furnaces could be made, resembling the double-arc furnace, Fig. 12, but it would be difficult to distinguish clearly between this and the furnace of Fig. 18 as modified in the Swedish iron-furnace. In resistance furnaces with solid or partly melted resisting contents, arcs may frequently form between the electrodes and the charge, or in the charge itself, and it is therefore difficult to distinguish certainly between a resistance and an arc-furnace. An electric smelting furnace may heat by resistance, when smelting an easily fusible charge, such as iron ore,

which has a low resistivity, or by an arc, when a less fusible charge having a high resistivity is used, as in making calcium carbide.

(3) **Furnaces with Liquid Resisting Contents.**—These consist of a refractory reservoir, containing fused slag, or metal, through which the electric current passes. The liquid becomes superheated by the passage of the current, and is able to melt the fresh material, which can be added at intervals or continuously. The current is introduced by carbon electrodes, by water-cooled metal electrodes, or by induction.

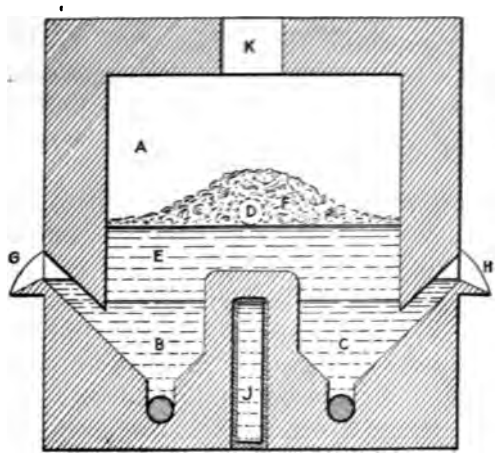

FIG. 20.—De Laval ore-smelting furnace.

The de Laval furnace, Fig. 20, is in this class; it consists of a chamber, *A*, the lower part of which is divided into two troughs, *B* and *C*, containing molten metal, with which electrical contact is made by metal terminals. A molten slag, *E*, fills the furnace above the dividing wall, and the electric current flows between *B* and *C* through the molten slag. The slag becomes superheated and dissolves the ore, *F*, which is added through a hole, *K*, in the top of the furnace. Alternating current should be employed to avoid electrolysis. The slag fills the furnace up to the hole, *D*, at which it overflows. The metal in the troughs overflows at the spouts, *G* and *H*, as fast as it is formed. In order to prevent the melting away of the wall between the troughs a water-cooled metal block, *J*, is inserted. Even with this precaution there is danger of short-circuiting, because the metal in *B* and *C* may penetrate to the water jacket, *J*, thus forming a complete metallic connection between the furnace terminals.

The Snyder induction smelting furnace, Fig. 131, resembles the Laval furnace, but the electric current is generated within the furnace, by induction, instead of being led in by metal terminals or electrodes.

Furnaces having resistors of liquid metal are used in electric steel-making. Such a furnace consists of a long canal containing the molten steel which becomes heated by the passage of the electric current. The canal may be folded backward and forward for compactness, and to reduce the loss of heat. The current may be led in through water-cooled metal terminals, as in Gin's furnace, Fig. 108; but it is preferably generated directly in the molten metal by induction, the canal forming the short-circuited secondary winding of a transformer, as in the Kjellin steel furnace, Fig. 102; the Grönwall induction furnace, Fig. 104, and the Colby steel furnace, Fig. 103, and Frontispiece.

Dr. Hering's furnace, Fig. 21,[1] consists of a crucible or hearth containing molten metal, and two relatively small channels or holes containing the same metal. These channels lead to metal electrodes, which have water-cooled terminals connecting directly with the low-tension winding of a transformer. Practically all the heat in the furnace is produced by the passage of the electric current through the molten contents of these constricted channels or holes, partly on account of the electrical resistance of the metal, and partly by frictional heating due to the very active circulation. The peculiar feature of the furnace is that the heat, which is produced in these heaters, is conveyed to the charge in the crucible by an electrically produced circulation. This circulation, which is shown by arrows in the figure, consists of an outward flow of metal in the center of each channel, cooler metal returning down the sides of the channel. This circulation is not due to differences of density causing the hotter material to rise in the channel, which would be entirely too slow for a practicable furnace; it is caused by a newly discovered force produced by the electric current itself. The liquid is caused by this internal electro-mechanical force, to move radially from the walls of the channel to its axis, and by the hydraulic pressure thus produced, it then escapes along the axis and through the open end into the body of the furnace, producing what has been popularly termed the "squirt effect." The same force produces the well-

[1] Dr. Carl Hering, Trans. Am. Electrochem. Soc., vol. xix, 1911, p. 255. The author is indebted to Dr. Hering for the illustration and for some of the information contained in this account.

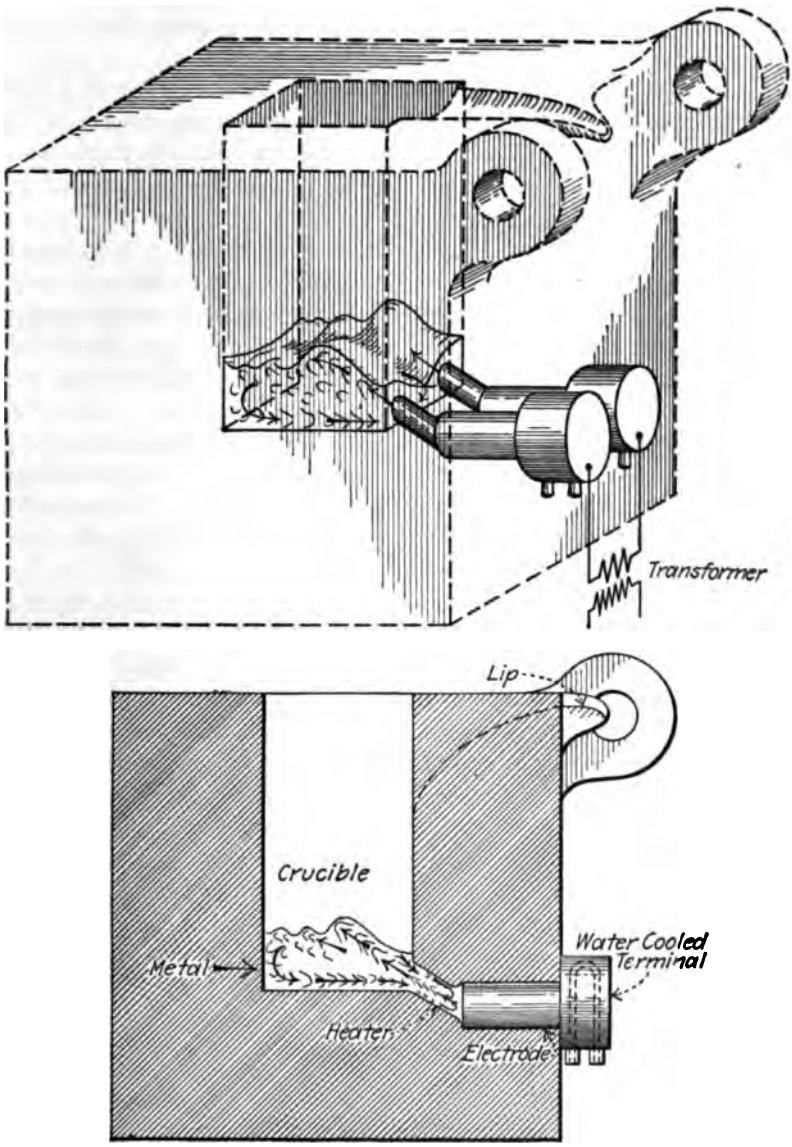

FIG. 21.—Hering's resistance furnace.

known "pinch effect" (see page 137), in the induction furnace and in liquid conductors in general. The rapidity of the circulation is indicated in the figure by the mound of molten metal abova each channel, and is under the control of the designer.

A furnace of this construction requires a large current at a low voltage, and this is best supplied by a special transformer having a secondary winding of only one turn, connected directly to the electrode terminals; in tilting furnaces the transformer is attached to the outside of the furnace.

In Gin's furnace, or Kjellin's furnace, to obtain a sufficiently high electrical resistance, the whole of the metal to be heated is contained in a long channel of small section and this is an unsatisfactory feature. In Hering's furnace only a small constant fractional part of the molten metal is heated in the resistor channels, but on account of the very rapid circulation, the heat is quickly conveyed into the body of metal in the crucible, and the metal in the channels does not become overheated; the heating of such a furnace may therefore be forced to advantage. This furnace should be more efficient than Gin's or Kjellin's furnaces, as it has a much smaller surface for radiating heat, and the walls can be made very thick. In the use of this furnace for steel-making, the systematic circulation rapidly exposes fresh surfaces to the action of the slag. This facilitates refining, and sulphur is very quickly taken out of the steel. It might be supposed that the resistor-holes would wear away rapidly on account of the high temperature and the rapid movement of their contents, but Dr. Hering informs the author that he has obtained a lining material which is very satisfactory and can readily be renewed if necessary; as yet the holes have shown no signs of wear. The whole furnace is extremely simple in construction. Enough metal would usually be left in the furnace to complete the electrical connection between the two resistor-holes, and when this is not the case a furnace can be started by pouring in a small charge of molten metal to establish the electrical connection. The furnace is used for melting and refining metals, and also for heating any substance that can be floated on a bath of some inert molten metal.

III. Electrolytic Furnaces

In these furnaces the power of a continuous current to divide a fused chemical compound into two component parts is utilized, while the heating effect of the current is also needed to keep the contents of

the furnace in a state of fusion. Most chemical compounds can be decomposed in this way, but some behave like the metals and alloys, and carry the current without suffering decomposition. Mixtures of two or more compounds are often employed, as this facilitates the passage of the current and renders the charge more fusible.

Fig. 22 represents a furnace for the electrolysis of fused zinc chloride: it consists of a chamber, *A*, containing the fused chloride, *B*. The positive electrode, *C*, is made of carbon, and dips into the electrolyte, while the fused zinc, *D*, resulting from the operation,

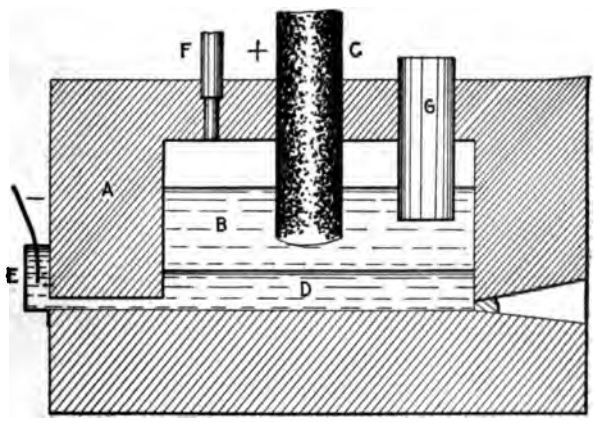

FIG. 22.—Electrolytic furnace.

forms the negative electrode; electrical connection being made with it at *E*. The passage of the current splits the zinc chloride into zinc, which collects at *D*, and chlorine, which is liberated at the electrode, *C*, and is withdrawn from the furnace by the pipe, *F*. A cylinder, *G*, passes through the roof of the furnace and dips into the fused electrolyte, to enable fresh chloride to be added without allowing the chlorine to escape.

Furnaces for the production of aluminium (Figs. 5 and 154) are also electrolytic.

The classification adopted in this chapter is shown diagramatically in the following table and in the chart of electric furnaces, Fig 23. An example of each class is given in the table which is numbered to correspond with the chart.

TABLE I.—CLASSIFICATION OF ELECTRIC FURNACES

- Arc Furnaces
  - Independent Arc (Moissan's furnace). (1)
  - Direct Heating Arc
    - Single Arc (Girod). (2)
    - Double Arc (Héroult). (3)
- Resistance Furnaces
  - With special Resistor
    - Resistor in Walls (electrical tube furnace). (4)
    - Resistor in Charge (carborundum furnace). (5)
  - Without special Resistor
    - Without Electro-lysis
      - Resisting contents of furnace
        - Solid (Graphite furnace). (6)
        - Melting (Héroult smelting furnace). (7)
        - Liquid (de Laval furnace). (8)
    - Electrolytic (aluminium furnace). (9)

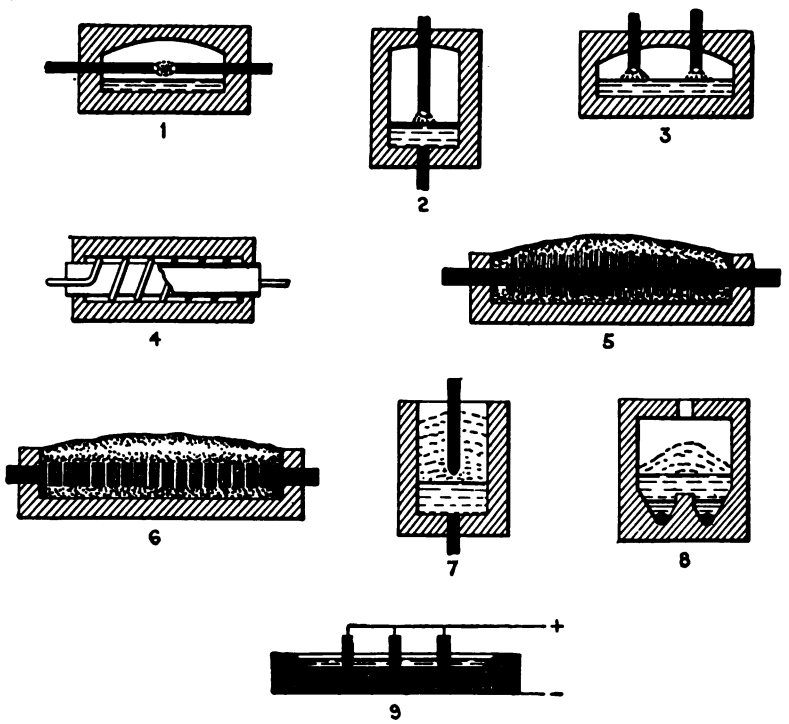

FIG. 23.—Chart of electric furnaces.

CHAPTER III

EFFICIENCY OF ELECTRIC AND OTHER FURNACES, AND RELATIVE COST OF ELECTRICAL AND FUEL HEAT

Electricity would generally be preferable to fuel for producing heat, if it were not that the cost of electrical energy is almost invariably greater, and usually many times greater than that of an equivalent amount of fuel. In certain operations, such as the production of carborundum or graphite, electricity must be employed, because a sufficiently high temperature cannot be obtained by the combustion of fuel. In other operations, such as the production of aluminium, the electrolytic action of the electric current is essential to the process. A large number of metallurgical operations, however, were carried on successfully before electric smelting was thought of; and for such purposes electricity is only employed when its greater efficiency and convenience out-weigh the usually greater cost. It has recently been realized that electricity can sometimes economically replace coal or coke as a heating agent in operations such as the smelting of zinc or even iron-ores, or in the production of steel.

In comparing electricity and coal, we may consider how much heat each will produce, or how much electrical energy will be needed to produce as much heat as 1 lb. of coal would yield on burning. One unit or kilowatt-hour of electrical energy will produce 3,415 B.T.U. (British Thermal Units), of heat, and 1 lb. of good quality coal will produce about 14,000 B.T.U. Thus 4 kw.-hours are needed to produce as much heat as 1 lb. of coal.

For small consumers, buying electrical energy for lighting at 10 or 15 cents a unit, and coal at $6 or $7 a short ton, the cost of electrical heat would be one or two hundred times that of coal-heat.

As a year consists of 8,766 hours, 1 kw. would yield, if operated continuously for that time, nearly 30,000,000 B.T.U., or one electrical horse-power year would yield 22,320,000 B.T.U.; and as 1 long ton of coal will produce about 31,000,000 B.T.U., it will be seen that an electrical horse-power year produces about 25 per cent. less heat than a ton of good coal; or 1 ton of coal would

produce as much heat as 1⅓ E.H.P. years. If an electrical horse-power year could be purchased for $30 and a long ton of coal for $4, the cost of electrical heat, per B.T.U. would be ten times the cost of coal-heat.

In localities where water-power can be cheaply developed, and where transportation charges for coal and coke are high, it may be possible to produce electrical power at $10 or less per electric horse-power year, in large amounts as would be necessary for electric furnace work, and coal may cost $6 or $8, while furnace coke might cost even more than that. Under such conditions the cost of electrical heat would be less than twice that of coal heat, and would approximate to the cost of heat furnished by good furnace coke.

It might appear from these figures, that electrical heating could not be profitably employed, except under the most extreme conditions of cheap power and dear fuel, but it should be remembered that in an electric furnace, a large proportion of the heat supplied is actually utilized in heating the materials in the furnace, while in a coal-fired furnace this is not always the case, and often, particularly in high-temperature furnaces, the greater part of the heat is wasted, and only a small proportion is utilized.

The efficiency of a furnace may be determined by finding what proportion of the heating power of the coal or the electrical energy supplied, is actually utilized in heating the contents of the furnace. The following table[1] gives typical efficiencies for a number of furnaces.

TABLE II.—NET EFFICIENCIES OF FURNACES USED FOR MELTING METALS

	Per Cent.
Crucible steel furnaces, fired with coke	2–3
Reverberatory furnaces for melting metals	10–15
Regenerative open-hearth steel furnaces	20–30
Shaft furnaces (foundry cupolas, etc.)	30–50
Large electrical furnaces	60–85

These efficiencies relate to the melting of metals, but similar figures would be obtained for the same furnaces employed in smelting ores. In the crucible steel furnace and the reverberatory furnace, the greater part of the heat is carried away in the escaping gases, which are necessarily extremely hot; and in the crucible

[1] The figures are taken from Prof. J. W. Richards' "Metallurgical Calculations," Part 1, p. 89.

furnace the loss is additionally high on account of the slow transmission of the heat to the steel inside the crucible. In the open-hearth furnace, the loss of heat due to the escaping gases is very much less because the heat they contain is given to the brickwork in the regenerators or checker chambers, and returned from these to the furnace by the incoming gas and air. In shaft furnaces the heat of the furnace gases is largely absorbed by the solid materials in the upper part of the furnace, and by them returned to the zone of fusion. When metals are melted in the electric furnace, no gases need be produced, and thus a large waste of heat is entirely avoided; while the furnace gases produced in the electric smelting of ores are very much less in amount than those from similar coal- or gas-fired furnaces. The amount of air that passes through most

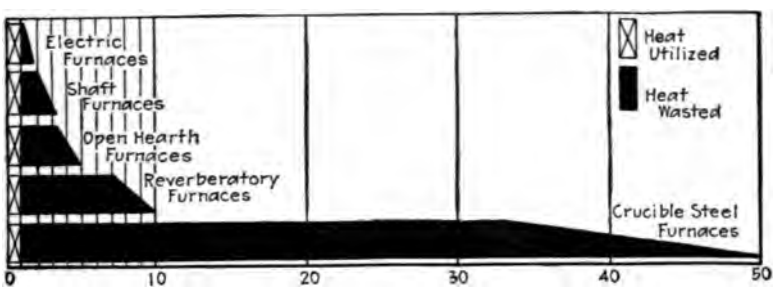

FIG. 24.—Losses of heat in melting metals.

furnaces, in excess of that required to burn the fuel, increases the loss of heat by the furnace gases; and the incomplete combustion of the fuel is another source of loss. The large loss of heat by conduction and radiation from the furnace, is common to fuel and electric furnaces, and depends mainly upon the size and temperature of the furnace; the larger furnaces having, of course, a smaller relative loss.

Fig. 24 has been arranged to show, for each class of furnace, the heat equivalent of fuel or electrical energy needed to impart unit quantity of heat to the metal to be melted. The black areas indicate the loss of heat, the upper edge of each area showing the minimum, and the lower edge, the maximum loss for each class of furnace. The diagram also shows that for one heat equivalent of power supplied to an electric furnace; a shaft furnace would require nearly two; an open-hearth furnace three; a reverberatory furnace six; and a crucible steel furnace 30 heat equivalents of fuel, in order to melt the same amount of metal.

If these numbers are used to multiply the cost of a ton of the coal or coke used, assuming it to be of about 14,000 B.T.U., the resulting prices may be compared with the cost of $1\frac{1}{3}$ E.H.P. years, and will give an idea whether coal or electrical heating would be cheaper in any particular case. Thus in making crucible steel with furnace coke at $5 and the electric horse-power year at $30, the coke used would cost $\$5 \times 30 = \$150$, and the electrical energy would cost $\$30 \times 1\frac{1}{3} = \$40$, thus making a good case for the electrical production of crucible steel. In the case of the open-hearth furnace, electrical energy at $10 an electric horse-power year would cost a little more than coal at $4 a ton, while it would correspond with coke at $6 to $7 a ton in a shaft furnace.[1]

These numbers are based on the mean of the figures given by Prof. Richards for the usual efficiencies of certain classes of furnaces; and in any selected case it would be desirable to have the efficiencies of the particular electrical and fuel furnaces to be compared. The incidental expenses connected with each method of smelting should also be considered.

The results do, nevertheless, give a fair idea of the conditions under which electrical heat could commercially replace fuel-heat. They show clearly, that in the production of crucible steel, electrical power should be able to replace coke as a source of heat. The writer pointed out, more than nine years ago,[2] that the production of crucible steel in the electric furnace was technically and financially possible, and plants for this purpose are now in operation or construction in Sweden, Germany, England, the United States, Canada, and elsewhere.

In comparing the cost of electrical and fuel heating, it has been assumed that the full heat-value was obtained from the electrical horse-power year. To obtain this, it would be necessary for the furnaces to be operated at their full load for every minute of the year, and any shut-down, or any period during which a smaller amount of power was being utilized, would lessen the useful effect, without any corresponding reduction in the amount paid for the power; as it is bought by the year, and not by the total kilowatt-hours consumed. In the case of fuel-fired furnaces, a shut-down, or a period of reduced output, will increase the working cost per ton of product; but not to

[1] See also editorial "Electric Heat versus Heat from Fuel," Electrochemical Industry, vol. v, p. 298.

[2] Stansfield, The Electrothermic Production of Iron and Steel, Trans. Can. Soc. of Civil Engineers, vol. xviii, Part 1 (1904), p. 72.

the same extent, as the fuel is usually bought by the ton, and not on some assumed standard of maximum consumption. The time during which a single electric furnace is shut down for repairs will necessarily increase decidedly the working cost of electrical energy; but when electric smelting has become well established, the losses in this way will not be heavy. In the regular operation of an electric smelting plant, there will be few accidental shut-downs, all working furnaces will be kept at a steady load, and, by means of spare furnaces, the full load will be maintained during the periodical lay-off of each furnace for repairs.

Having now considered, in a general manner, the efficiency of furnaces and the relative costs of electrical and fuel heating, the method of calculating these efficiencies may be discussed.

THE CALCULATION OF FURNACE EFFICIENCIES[1]

The word heat is used popularly in two senses; thus "the heat of a furnace," meaning how hot the furnace is, is quite distinct from the amount of heat produced in the furnace per minute, or the amount of heat needed to turn a pound of ice into a pound of water. The first use is really a *quality* of the hot body, and to avoid confusion the word temperature should be used in such cases, while the word heat should be restricted to the second case, in which the *quantity* of heat is referred to. A definite quantity of heat can be supplied at a high or a low temperature, just as a definite quantity of air can be supplied at a high or a low pressure; and the addition of heat to a body raises the temperature, just in the same way that pumping air into a receiver raises the pressure.

Temperatures are measured, as is well known, by thermometers or pyrometers (the latter for high temperatures), and the scales of these instruments are based upon the temperatures of melting ice and boiling water, these being 0° and 100° on the Centigrade scale, and 32° and 212° on the Fahrenheit scale. The use of these two scales complicates technical literature, since the Centigrade is mainly used for scientific purposes, while the Fahrenheit is mainly used for ordinary affairs, and it is often necessary to state temperatures on both scales in order to be generally understood. The conversion from one scale to the other is simple if it is remembered that the temperatures 0° C. and 100° C. are the same as 32° F. and 212° F., and

[1] For a full account, with examples, of the calculation of furnace efficiencies, see Prof. J. W. Richards' "Metallurgical Calculations," Parts I, II, and III.

that a difference of temperature of 5° on the Centigrade scale corresponds to a difference of temperature of 9° on the Fahrenheit scale; whence $F.° = 1.8\ C° + 32$; and $C.° = 5/9\ (F.° - 32)$.

Heat is measured in several different units, thus further complicating technical writings, most of these units representing the amount of heat needed to raise the temperature of unit weight of water through 1°. By selecting different weights of water, as the pound, gram, or kilogram, and different temperature scales, it is easy to get six or eight different units of heat, thus entailing a large amount of trouble, both in the statement of amounts of heat and in changing these from one system of units to another.

The following heat units are usually used:

The Gram-calorie.—(1 cal.)—The amount of heat needed to raise the temperature of 1 grm. of water 1° C. (from 10° C. to 11° C.)[1]

The Kilogram-Calorie.—(1 Cal.)—The amount of heat needed to raise the temperature of 1 kg. of water 1° C.

The Pound-Calorie.—(1 Calb.)—The amount of heat needed to raise the temperature of 1 lb. of water 1° C.

The British Thermal Unit.—(1 B.T.U.)—The amount of heat needed to raise the temperature of 1 lb. of water 1° F. (from 60° F. to 61° F.)[1]

The Evaporative Unit.—The amount of heat needed to convert 1 lb. of water at 212° F. into steam at the same temperature (at normal atmospheric pressure).

The following are the relations between these different units:

[1] The value of the gram calorie depends upon the specific heat of water between 10° C. and 11° C. (J. A. Fleming, Cantor lecture, Journ. Roy. Soc. of Arts, lix, 1911, p. 834), and that of the B.T.U. on its specific heat between 60° F. and 61° F. Recent determinations (H. T. Barnes, The mechanical equivalent of heat measured by electrical means, Int. Elect. Congress, St. Louis, 1904, p. 65) show that the specific heat at 10° C. is about 0.2 per cent. greater than at 60° F. This would mean that in converting pound calories into B.T.U. by the factor 9/5 an error of about 0.2 per cent. would be made. Also as the measurement of heat is usually conducted between 15° C. and 20° C., a correction will have to be made to reduce the results to calories as measured at 10° C. For these and other reasons it has been suggested that the calorie should be based on the mean specific heat of water from 0° C. to 100° C. This value is practically the same as if measured at 15° C., or at 60° F. The mechanical equivalent of 1 grm. calorie of heat measured at 15° C. is about 4.186 joules, making the heat value of 1 kw.-second, 0.239 Cal., or 0.527 Calb.

1 Kilogram-Calorie[1]	= 1,000 Gram-calories.
1 Pound-Calorie	= 453.6 Gram-calories.
1 British Thermal Unit	= 5/9 of a Pound-Calorie.
1 British Thermal Unit	= 252 Gram-calories.
1 Evaporative Unit	= 967 British Thermal Units.

The gram- and kilogram-calories are the most convenient for scientific investigations, but in cases where the weights are given in pounds the pound-calorie or the B.T.U. must usually be employed.

Rate of Heating.—The rate at which heat is produced, or supplied to a furnace, may be stated in any of the foregoing heat units combined with any convenient unit of time. Thus if 3 lb. of coke are burnt per minute, and if the coke has a calorific power of 7,000 centigrade units (that is gram-calories per gram of coal, or pound-calories per pound of coal), the rate of heat production will be 21,000 Calb. per minute. The unit of electrical power is the watt—that is the power of 1 ampere flowing through the resistance of 1 ohm, and this produces heat at the rate of 0.239 cal. per second. In electric-furnace calculations it is often convenient to use the watt as the rate of heat production instead of the more cumbrous units just mentioned.

1 watt	= 0.239 grm.-calorie per second.
1 kilowatt	= 0.239 kg.-calorie per second.
1 kilowatt	= 0.527 lb.-calorie per second.

Dr. Carl Hering[2] has pointed out that great complication is caused by measuring electrical energy, heat energy and chemical energy in different units, and that it would be very desirable that all forms of energy should be expressed in electrical units. He recommends the watt-hour or kilowatt-hour as the practical unit for the measurement of all kinds of energy: he gives the following conversion factors:

POWER

1 watt	= 0.238882 grm.-calorie per second.
1 watt	= 0.0568776 B.T.U. per minute.
1 kilowatt	= 14.3329 kg.-calories per minute.

ENERGY

1 watt-hour	= 0.859975 kg.-calorie.
1 watt-hour	= 3.41266 B.T.U.

[1] In order to distinguish between the kilogram calorie and the gram calorie it is usual to use a *C* for the first, and a *c* for the second, thus 100 kg. calories would be written 100 Cal., and 100 grm. calories would be 100 cal. The author suggests the contraction Calb., for pound-calories.

[2] Carl Hering, Trans. Am. Electrochem. Soc., xxi, 1912, p. 499.

The efficiency of a furnace is the ratio between the amount of heat usefully employed in the furnace and the heat value of the fuel or electrical energy supplied: thus, if 100 lb. of steel can be melted in a crucible furnace by the use of 150 lb. of coke, and if 300 lb.-calories are needed to melt 1 lb. of steel (this having been determined by experiment), and if 1 lb. of coke can furnish 7,200 lb.-calories (found by experiment), the efficiency of the furnace can at once be obtained.

$$\text{Efficiency} = \frac{\text{Weight of steel} \times \text{heat needed to melt 1 lb. steel.}}{\text{Weight of coke} \times \text{heat furnished by 1 lb. coke.}}$$

$$\text{Efficiency} = \frac{100 \text{ lbs.} \times 300 \text{ Calb.}}{150 \text{ lbs.} \times 7{,}200 \text{ Calb.}} = 0.028 = 2.8 \text{ per cent.}$$

The statement that 300 lb.-calories are needed to melt 1 lb. of steel means, that if to 1 lb. of cold steel there could be added 300 lb.-calories of heat, without any of the heat being lost, the steel would be heated to its melting-point and melted. It is, of course, impossible to do this, but by pouring some molten steel into a vessel of water, and noting the rise of temperature of the water, the number of calories given out by the steel in cooling can be determined, and this is obviously the same as the amount of heat needed to melt the steel. The number of calories being equal to the product of the weight of water and its rise of temperature, corrections being made for the heat absorbed by the vessel and otherwise lost during the experiment.

The amount of heat needed to melt 1 lb. of each of the common metals, and the temperatures at which they melt, are given in the following table; the figures have all been obtained by experiment, with the exception of the heat of fusion of wrought-iron, which has been calculated:

The figures in the last three columns really represent the amount of heat given out by 1 lb. of the metal in cooling from the molten state to 32° F. In heating the metal from 60° or 70° F. rather less heat will be needed, but on the other hand, some additional heat will be required in order that the metal shall be thoroughly melted, and the heat actually needed to heat the metal to a casting temperature will be a little more than the figures in the table.

The amount of heat that can be produced from 1 lb. of coke, can be determined by burning a small weighed quantity of the coke in a calorimeter; which is an instrument for measuring the amount of heat that is produced. The amount of heat produced by unit

TABLE III.—MELTING TEMPERATURES OF METALS, AND AMOUNTS OF HEAT REQUIRED TO MELT THEM

Metal	Melting temperature		Heat to melt 1 lb.		
	C.	F.	Calb.[1]	B.T.U.	Watt-hrs.
Tin	232°	450°	28	51	15
Lead	327°	620°	16	28	8
Zinc	419°	786°	68	122	36
Aluminium	657°	1214°	258	465	136
Brass (65 % copper)	920°	1688°	130	234	69
Copper[2]	1083°	1983°	162	292	85
Cast iron [3] (white)	1027°–1135°	1880°–2075°			
Cast iron (gray)	1100°–1275°	2012°–2327°	245	441	129
Tool steel (1 % carbon)	1425°	2600°	300	540	158
Wrought-iron	1503°	2737°	343	617	181

weight of a fuel, is known as its calorific power, and is usually measured in the corresponding heat units; that is, heat units containing the same unit of weight; as, for example, the number of gram-calories produced by 1 grm. of fuel; the number of pound-calories produced by 1 lb. of fuel, or the number of B.T.U. produced by 1 lb. of fuel. The first two of these results will obviously be identical, and may be called the Centigrade calorific power, while the last result will be 9/5 times as large, and may be called the Fahrenheit calorific power. Thus the calorific power of carbon is 8,100 on the Centigrade scale, and 14,580 on the Fahrenheit scale, meaning that one part by weight of carbon would give out as much heat, if completely burnt, as would raise the temperature of 8,100 parts of water 1° C., or 14,580 parts of water 1° F., so the result is the same, whatever unit of weight is selected. When, however, the fuel is measured by volume, as in the case of a gas, it will be necessary to state the calorific power as so many B.T.U. per cubic foot, or calories per cubic foot, or per cubic meter. Calorific powers are also sometimes stated in evaporative units, thus avoiding the use of either scale of temperature. If Dr. Hering's suggestion is adopted we shall have to state calorific power in kilowatt-hours per kilogram or cubic meter of the fuel.

In many furnaces the carbon in the fuel is not burnt completely,

[1] These figures are mainly from Richards' "Metallurgical Calculations."

[2] The figure for copper, 1,083° C., is its melting temperature when protected from oxidation, by a cover of charcoal for example. Oxidized copper melts at 1,062° C.

[3] Melting temperatures of cast-iron were determined by Prof. H. M. Howe, see his Metallurgical Laboratory Notes, p. 125.

and it then has a smaller effective calorific power. The complete combustion of carbon produces the gas CO_2, containing two atoms of oxygen, while its incomplete combustion produces the gas CO, containing only one atom of oxygen. The calorific power in the latter case being only 2,430 C., or 4,374 F., which is less than one-third of its calorific power when burnt completely. The iron blast-furnace furnishes a good example of this loss of heat through the imperfect combustion of the coke. In order to thoroughly reduce the iron ore to metal a large amount of coke must be present in the furnace, and this can only be burnt to CO in the lower part of the furnace, thus obtaining far less heat from the same weight of coke than if it could be burnt completely to CO_2. The CO produced in the lower part of the furnace is, however, partly utilized, higher up, for the reduction of the iron-ore, and the CO that finally escapes from the furnace is employed as a fuel for heating the blast and for raising steam or driving a gas-engine.

In determining the calorific power of a fuel in a calorimeter, the aqueous vapor resulting from the burning of any hydrogen in the fuel, and any moisture and "combined water" in the fuel, will be condensed to water; and its latent heat of condensation will be included in the resulting calorific power. When the fuel is burnt in any metallurgical furnace, the furnace gases escape at too high a temperature to allow of the condensation of the vapor, and in calculating furnace efficiencies a calorific power should be used that does not include the heat of condensation of the water vapor, since this heat can never be obtained in the furnace. The observed calorific power should, therefore, be corrected by subtracting from it the heat of condensation of all the water vapor that is present in the fuel, or is produced by its combustion. The corrected value has been called the metallurgical or practical calorific power,[1] or the "net" calorific power and should be used instead of the "gross" or calorimeter calorific power, in the case of all furnaces from which the water, contained in the furnace gases, escapes in the form of vapor.

The following table contains the metallurgical calorific powers of some of the commoner fuels, and some pure substances. The calorific powers of fuels cannot, however, be stated exactly, as they vary considerably.

The figures in this table are, in many cases, lower than the calorific powers obtained experimentally in a calorimeter, the difference

[1] Prof. J. W. Richards' *loc. cit.*

being the correction of 606.5 lb.-calories per pound of water in the products of combustion; this amount of heat being needed to evaporate a pound of water at 0° C. In calculating furnace efficiencies by means of this table, the furnace will thus be debited with the sensible heat carried by the water vapor as well as with that carried by the other furnace gases, but the heat of condensation of the water vapor will have been removed from the balance sheet.

TABLE IV.—CALORIFIC POWERS

(All water remaining uncondensed)

	C.	F.
	Calb.[1]	B.T.U.[2]
Carbon (burnt to CO_2), per lb.	8,100	14,580
Carbon (burnt to CO), per lb.	2,430	4,374
Carbon monoxide, per lb.	2,430	4,374
Carbon monoxide, per cu. ft.	191	344
Hydrogen, per lb.	29,030	52,254
Hydrogen, per cu. ft.	163	293.5
Methane (Marsh gas, CH_4), per cu. ft.	537	966
Ethylene (Olefiant gas, C_2H_4), per cu. ft.	904	1,627
Wood (air dried), per lb.	about 3,000	about 5,400
Peat (air dried), per lb.	3,000– 4,000	5,400– 7,200
Charcoal (5 to 10 per cent. moisture), per lb.	7,000– 7,500	12,500–13,500
Oven coke, per lb.	6,900– 7,400	12,400–13,300
Anthracite, per lb.	6,500– 7,500	11,500–13,500
Bituminous coal, per lb.	7,000– 8,000	12,500–14,500
Fuel oil, per lb.	9,500–11,000	17,000–20,000
Natural gas, per cu. ft.	460– 540	830– 970
Coal gas, per cu. ft.	300– 360	550– 650
Water gas, per cu. ft.	140– 180	250– 320
Producer gas, per cu. ft.	55– 90	100– 160
Electrical energy, per kilowatt-hour[3]	1,897	3,415
Electrical energy, per E.H.P. hour	1,415	2,547
Electrical energy, per E.H.P. year of 8,766 hours.	12,400,000	22,320,000

The calorific powers of the pure substances, forming the first part of the table, will serve as data for calculating the calorific power of a gaseous fuel of known composition, and will enable approximate figures to be obtained for solid and liquid fuels. The

[1] The values for pure substances in this column are those adopted by Prof. Richards.

[2] These values are obtained by multiplying the figures in the previous column by the factor 9/5.

[3] The values for electrical energy have been calculated in terms of the specific heat of water at 15° C., 1 kilowatt-second being 0.239 Cal., or 0.527 Calb.

coal and other solid fuels in the lower part of the table are supposed to be in the condition in which they would naturally occur: the wood being air dried, and containing some 20 to 25 per cent. of moisture; the peat also air dried and retaining 20 to 30 per cent. of moisture; the charcoal, coke and coal have the usual amounts of ash and moisture. The figures given for coal and other fuels will not cover all cases, but are intended to represent the ordinary run of fuels. The calorific powers of gases, per cubic foot, correspond to dry gas at 32° F., and would be about 5 per cent. less at 60° F., and 7 per cent. less at 70° F. on account of the increase in volume of the gas: the presence of moisture would still further decrease the calorific power. These figures refer also to gases under the normal barometric pressure of 760 mm. The calorific power of unit volume varies with changes of pressure; being, for example, decidedly less at places of great elevation.

By the aid of Tables III and IV it will be easy to obtain, approximately, the percentage efficiency of any furnace, whether fired by solid, liquid, or gaseous fuel, or heated electrically—if it is employed for heating and melting metals, and if the amount of fuel or electrical energy corresponding to the melting of a certain weight of metal is known. It will not be possible, however, to calculate in the same manner the efficiency of a furnace, such as an open-hearth steel furnace, in which the metal is kept molten for some hours in order to allow of certain changes being made in its composition. In such a furnace the efficiency can only be calculated in reference to the time during which the charge was being heated. During the remainder of the "heat" the furnace may remain for considerable periods without any marked rise of temperature, although fuel is constantly being used; thus making the calculated efficiency zero during such periods.

The efficiencies of metal-melting furnaces were considered first on account of the simplicity of the calculation. But it is equally possible to calculate the efficiency of a blast furnace, or an electrical ore-smelting furnace, in which the heat is used, not merely in melting a metal, but also in effecting the chemical work of reducing the ore to a metallic condition. The amounts of heat necessary for the formation of a large number of chemical compounds are known, and by means of these, it is possible to draw up a balance sheet showing what amount of heat is needed for the chemical reactions, as well as for melting the metal and slag in the furnace. The efficiency can then be calculated as in the simpler cases.

As an example we may calculate the efficiency of a Héroult elec-

trical steel furnace, operated at La Praz, France, for the Haanel commission in March, 1904.[1] The furnace—basic lined, was making steel by melting scrap with ore and lime.

The charge selected for calculation (number 660) consisted of:

Steel-scrap	5,733 lb.
Iron ore	430 lb.
Lime	346 lb.

Other additions were made after the charge was melted, but for obtaining the melting efficiency it will only be necessary to consider the operation of melting this charge in the furnace.

The scrap charged had the following composition:

Carbon	0.110 per cent.	Phosphorus	0.220 per cent.
Silicon	0.152 per cent.	Manganese	0.130 per cent.
Sulphur	0.055 per cent.	Arsenic	0.089 per cent.

Supposing that the iron-ore in the charge contained 400 lb. of ferric oxide, it may be assumed, that during the melting of the charge, this was reduced to ferrous oxide by the oxidation of most of the metalloids and some of the iron in the original scrap. A rough calculation shows that the melted charge would consist of about 5,660 lb. of "dead soft" steel, and 850 lb. of slag rich in ferrous oxide and lime, and that the reaction would produce some 24,000 lb.-calories, which makes a small addition to the heat furnished by the electric current.

Assuming that a temperature of 1,520° C. is necessary for a complete fusion of the charge (see Table III), about 344 Calb. will be needed to melt each pound of soft steel, or, in all, $344 \times 5{,}660 = 1{,}947{,}000$ Calb.

The slag will need about 600 Calb. per pound in order to melt and heat it to the same temperature, or, in all, $600 \times 850 = 510{,}000$ Calb.

The electrical power employed was 215 kw. during the first hour, and 342 during the remainder of the run; the current being supplied at about 110 volts. The time occupied in melting the charge was 5 1/3 hours, and the electrical energy supplied to the furnace during this time was 1,680 kw.-hours.

The heat supplied by the electric current was:

$1{,}680 \times 1{,}897 = 3{,}187{,}000$ Calb. (See Table IV.)

In the operation of melting the charge the heat utilized may be taken as that needed to melt the steel and the slag, while the heat

[1] Report of the Commission appointed to investigate the different electrothermic processes for the smelting of iron-ores and the making of steel in Europe, pp. 54, 55, 71 and 72.

supplied to the furnace is produced in part by the electric current, and in part by the reaction between the scrap and the iron-ore.

BALANCE SHEET OF HEAT

Heat supplied to the furnace:	Calb.
1,680 kw.-hours of electrical energy	3,187,000
Reaction between steel scrap and iron-ore	24,000
Total	3,211,000
Heat utilized in the furnace:	
To melt 5,660 lb. of soft steel	1,947,000
To melt 850 lb. of basic slag	510,000
Total	2,457,000

$$\text{Efficiency of furnace} = \frac{2,457,000}{3,211,000} = 0.765 = 76.5 \text{ per cent.}$$

In making this calculation it has been assumed that no oxidation of the steel scrap took place except by reaction with the iron-ore in the charge. Such an assumption would be quite wrong in regard to an open-hearth furnace, where the flame of burning gases constantly plays over the charge, but in the electric furnace the charge is largely protected from the air, and there is consequently less oxidation. If any considerable amount of iron were burnt in this way, the heat produced by its oxidation should have been added, in the balance sheet, to the heat supplied to the furnace; and this would lower the resulting figure for the efficiency.

After the charge was completely melted, the slag was poured off, and the steel further purified by the addition of fresh slags, made of lime, sand and fluor spar. After these were removed, the steel was recarburized in the furnace by additions of "carburite" (a mixture of iron and carbon) and ferro-silicon; some ferro-manganese was also added, and a little aluminium in the ladle.

The yield of ingots was 5,161 lb. of tool steel of the following composition:

Carbon	1.016 per cent.	Phosphorus	0.009 per cent.
Silicon	0.103 per cent.	Manganese	0.150 per cent.
Sulphur	0.020 per cent.	Arsenic	0.060 per cent.

Three hours were required for the purification and carburization of the steel, making a total of 8 1/3 hours, and a total consumption of 2,580 kw.-hours, or 0.171 E.H.P. years per ton of steel ingots. At

$10 per E.H.P. year, the cost of electrical energy for the ton (2,240 lb.) of tool steel would be $1.71.

COST OF ELECTRICAL ENERGY

Electrical energy for smelting is usually obtained from water-power, as this is generally less costly than steam or gas-engine power. A few figures may be quoted:

The Hydro-electric Power Commission of Ontario[1] pays $9.40 per year for a continuous electrical horse-power from Niagara Falls, if the amount taken exceeds 25,000 h.p., the charge being made on the maximum demand or "peak load." The power is delivered to the Commission at Niagara Falls at 12,000 volts, and is transmitted at 110,000 volts to various cities in southwestern Ontario. The charges made to these cities vary with the distance and the amount taken, but range in many cases from about $18 to $26 per continuous E.H.P. year, based on the maximum demand.

The Commission delivers power from other sources to cities in eastern Ontario at costs which vary, in several instances, between $14 and $23 per E.H.P. year, and which will fall to about $12 to $20 when the present demand has been doubled.[2]

In Sweden and Norway electrical power for smelting can be generated at as low a figure as from $4 to $8 yearly.[3]

In parts of British Columbia the cost of an electrical horse-power year will vary from about $20 to $40.

All the above charges are made on the maximum demand and not on the average power employed, but the demand for power in electric smelting will be far more steady than the usual industrial requirements for light and power. The charges apply, however, to high-voltage power which must be transformed to the lower voltages suitable for electric furnaces.

[1] "Water Powers of Canada," L. B. Denis and A. V. White, Commission of Conservation, Ottawa, 1911.

[2] The larger prices paid by some cities have been omitted as electric smelting would be carried on near a source of power.

[3] Prof. C. E. Lucke (Electrochemical Industry, vol. v, p. 230, June, 1907) gives the cost of water-power as $8.50 to $25 per kilowatt-year. Dr. R. S. Hutton (Electrochemical Industry, vol. v, p. 24, January, 1907) gives figures for cheap water-power, varying from $20 per horse-power year at Niagara, to $3 per horse-power year in Norway. Dr. Haanel (European Report, 1904, p. 32) says he is "credibly informed that the water-power at Chats Falls can be developed at a cost to produce an E.H.P. year at the rate of $4.50."

Electrical energy derived from steam power is usually decidedly more costly than from water-power, and may be expected to cost, under usual conditions, some $60 to $90 per continuous E.H.P. year assuming a load factor of 80 per cent. or 90 per cent. If, however, a very large steam plant is erected for continuous use in electric smelting, and if coal can be purchased cheaply, the cost might be reduced very greatly. Mr. W. Sykes,[1] states that in the Pittsburg district a 25,000 kw. power station, with 5,000 to 6,000 kw. generator sets, could be installed at a cost of $50 per kilowatt, and that with coal costing $1.25 per ton, the cost per kilowatt-hour would be 0.25 cents at 80 per cent. load factor, 0.3 cents at 60 per cent. load factor, and 0.4 cents at 40 per cent. load factor. These figures corresponding to $16.35, $19.62 and $26.16 respectively per continuous E.H.P. year of 8,766 hours. Under these conditions electrical power obtained from steam would compete in cost with hydro-electric power.

An approximate figure for the cost of operating a large steam-electric station can be had by charging $15 yearly for each kilowatt, and adding the cost of the coal, allowing 2 lb. for each kilowatt-hour.

A large amount of power can also be produced by means of gas engines run by the surplus gas from iron blast-furnaces. A furnace making 400 tons of pig-iron daily will yield enough gas to produce 10,000 h.p. in addition to heating the blast and running the blowing engine. The cost of running a large electric power-station operated by gas engines, in England, has been stated[2] to be $12 per E.H.P. year, apart from the amount charged for the gas.

[1] W. Sykes, "Power Supply to Electric Furnaces for Refining Iron and Steel," Trans. Am. Electrochem. Soc., xxi, 1912, p. 383.

[2] B. H. Thwaite, "The Economic Distribution of Electric Power from Blast-furnaces," Journ. Iron and Steel Inst., 1907, iii, p. 190.

CHAPTER IV

CONSTRUCTION AND DESIGN

An electric furnace consists essentially of some substance *R* (Fig. 25), through which an electric current flows, and of an envelope *C*, which retains the heat and the contents of the furnace. Carbon electrodes, *A* and *B*, are usually needed to convey the current in and out of the furnace. If the envelope could be made perfectly heat-tight, and if no fresh charge were introduced during the operation, it would be possible to obtain any temperature in *R* up to the volatilizing-point of the contents of the furnace, with the smallest electric current, provided it were allowed to pass for a sufficient

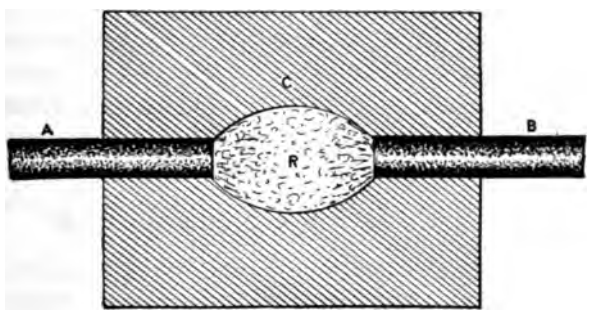

FIG. 25.—Ideal electric furnace.

length of time. With the materials actually available for furnace construction this is not possible. For a definite size and construction of furnace, a definite rate of heat production will be needed in order to attain any particular temperature.

The rate of production of heat is measured by the number of watts of electrical power supplied to the furnace, and may conveniently be stated in watts per cubic inch, or kilowatts per cubic foot of the interior volume of the furnace. The rate of heat production which is necessary to enable a certain temperature to be attained, may be calculated from a consideration of the area, thickness and conductivity for heat of the walls of the furnace; but it is more easily obtained by reference to furnaces of similar construction which have attained definite temperatures with a definite electric power.

The above considerations apply more particularly to an intermittent furnace, such as the Stassano furnace, in which a charge of ore or metal is submitted to the heat of the electric current until it has all been reduced or melted, and the whole of the furnace and its contents has been heated to a uniform high temperature. In the case of a continuous furnace, such as the Héroult furnace employed to smelt iron-ores at Sault Ste. Marie, Fig. 78, a constant stream of cold material enters the furnace, and after reduction and fusion, is tapped out as molten pig and slag; only a portion of the contents of the furnace being heated at any one time to the smelting temperature. In such a furnace the temperature attainable is limited by the melting temperature of the charge; any increase in the rate of heat supply will serve mainly to increase the rate of smelting, without materially increasing the temperature of the furnace. It is like melting ice in a pail, the ice melts faster on a hot day than on a cool one, but the water surrounding the ice will not become warm as long as there is any ice left to melt. Even in such a furnace each portion of the charge must ultimately be heated to the smelting temperature, and a definite rate of heat supply is needed if the furnace is to smelt at all.

MATERIALS OF FURNACE CONSTRUCTION

The materials for constructing the interior of electric and other furnaces, should be infusible at the temperature of the furnace; should resist the action of the metallic slags or other contents of the furnace; should retain the heat of the furnace as far as possible, and should be capable of being formed into bricks, or coherent linings, that will resist the mechanical action of the charge in the furnace. The following are a number of the more important materials that can be employed.

Fire-clay Bricks.[1]—The clay from which these are made consists

[1] Notes on the New Jersey Fire-brick Industry, H. Ries. Amer. Inst. Mining Engineers, vol. xxxiv (1904), p. 254.

Refractoriness of Some American Fire-brick. R. F. Weber, Amer. Inst. Mining Engineers, vol. xxxv, p. 637.

The Fire-clays of Missouri. H. A. Wheeler, Amer. Inst. Mining Engineers, vol. xxxv, p. 720.

Determination of the Refractoriness of Fire-clays. H. O. Hofman & C. D. Demond, Amer. Inst. Mining Engineers, vol. xxiv, p. 42; vol. xxv, p. 3; vol. xxviii, p. 435.

"Clays, their Occurrence, Properties and Uses." H. Ries, 1912.

A. H. Sexton, "Fuel and Refractory Materials" (text-book).

of pure clay, or kaolin, (Al_2O_3, $2SiO_2$, $2H_2O$), with a variable proportion of silica in addition to the amount present in the kaolin, and as little as possible of fluxing materials such as iron oxide, lime, magnesia, potash or soda. Even silica lowers the melting-point, and should be present only in moderate amount. These bricks are largely used for lining ordinary metallurgical furnaces, but are not usually sufficiently refractory for electric furnaces; they can, however, be used as a backing for more refractory material. Being silicious in composition, they are easily fluxed by slags containing metallic oxides. When not exposed to such slags they will stand temperatures nearly up to their melting-point, which varies for good fire-clay from about 1,600° C. to 1,730° C. or from 2,900° F. to 3,150° F. They should be laid in fire-clay mud, instead of lime mortar, as the latter would crumble away if strongly heated, and at still higher temperatures would flux the bricks. Fire-clay bricks are subject to a considerable shrinkage when fired. This shrinkage is permanent and varies in amount with the temperature to which the bricks have been heated. Subsequent heating and cooling, at lower temperatures, causes a small temporary expansion and contraction of the brick.

The following is an analysis of a good American fire-clay brick:[1]

Silica	53.5 per cent.	Lime	0.5 per cent.
Alumina	42.8 per cent.	Magnesia	0.25 per cent.
Ferric oxide	1.5 per cent.	Alkalies	0.6 per cent.

Silica Bricks.—These should contain about 95 per cent. to 97 per cent. of silica, SiO_2. The melting temperature of silica is approximately that of platinum, being about 1750° C., or 3,180° F.,[2] and the silica brick should stand up to about 1,700° C., or 3,100° F. They are useful for the roof and other parts of open-hearth steel-furnaces, that are exposed to a very high temperature, but not subjected to the action of metallic slags, which would soon flux them away. They have the property of expanding when fired, and their expansion and contraction when subsequently heated and cooled is greater than that of fire-clay bricks. This expansion of silica bricks amounts to about 1/4 in. per foot and special joints are left to accommodate it when building a furnace roof of these bricks.

[1] Messrs. Harbison-Walker.

[2] C. W. Kanolt, "Melting-points of Fire-bricks," Tech. Paper 10, Bureau of Standards, Washington, 1912; Met. and Chem. Eng., x, 1912, p. 692; Trans. Am. Electrochem. Soc., xxii, 1912, p. 95.

Silica bricks should be laid in a silicious mud for mortar, and in general, refractory bricks should be laid in mortar of the same composition as the brick, to avoid fluxing; thus it would not do to lay basic brick in silicious mortar, as the mortar would combine with and flux part of the brick.

The following is the analysis of a good silica brick of American manufacture:

Silica	95.5 per cent.	Lime	2.1 per cent.
Alumina	1.5 per cent.	Magnesia	0.1 per cent.
Ferric oxide	0.7 per cent.		

Silica Sand.—This is used for lining the hearth of the "acid" open-hearth furnace and also for the hearth of some reverberatory furnaces for smelting copper ores. Natural sands are often used and should contain enough impurity to enable them to frit or set, but not so much as to render them unduly fusible. The following analysis of a sand suitable for lining an open-hearth furnace is quoted by Harbison-Walker:

Silica	97.25 per cent.	Alkalies	0.36 per cent.
Alumina and iron oxide	0.16 per cent.	Water	0.24 per cent.
Lime	0.08 per cent.	Loss on ignition	0.36 per cent.
Magnesia	0.39 per cent.		

The sand is spread in a thin layer (about 1/2 in.) over the bottom of the furnace, and is then heated until it sets. Another layer is then added, and this is repeated until a solid bottom of silica has been obtained of the required thickness and shape.

Ganister.[1]—This is a clay-bearing sandstone found in the vicinity of Sheffield (England) and elsewhere. It contains nearly 90 per cent. of silica and about 10 per cent. of alumina, and can be bonded by means of the clay which it contains. It can be manufactured into bricks, which are somewhat less refractory than the true silica bricks, but it is largely used as a crushed material for making the rammed linings of Bessemer converters and other furnaces. Ganister is made artificially by mixing crushed silica with enough clay to make it bind.

Lime, CaO.—This is an extremely refractory material, and is useful for lining small electric furnaces. Its melting temperature is

[1] In the United States of America the word "ganister" has a different meaning. It is applied there to high-grade silica rock, containing over 95 per cent. of silica, and to the silica bricks made by bonding such rock with the addition of lime. See F. T. Havard, Refractories and Furnaces.

not exactly known, but may be about 2,050° C., or 3,700° F.[1] Lime is obtained by burning limestone, (CaO, CO_2), thus driving off the carbon dioxide which it contains. Burnt lime absorbs moisture from the air and slakes, forming the hydroxide CaO, H_2O. Lime mortar contains water and carbon dioxide, and when it is heated in a furnace, these are driven off, and the mortar crumbles away. Lime cannot be made into fire-bricks by mixing it with water, as the bricks would crumble in the furnace, and it is difficult to render lime coherent by the use of any other material. This difficulty of binding and liability to slake has prevented the general use of lime for furnace linings. Small electric and oxy-hydrogen furnaces may be constructed of blocks of quick-lime or of the natural limestone which becomes converted internally into lime during the operation of the furnace. Being basic or non-silicious in character, lime will resist the action of metallic slags, and it would form a valuable material for lining electric and other furnaces if it were not for the objections already mentioned. The use of lime in the electric furnace is also limited by its property of forming a fusible carbide when heated with carbon.

Lime that has been fused in an electric furnace is very compact, will stand heating followed by sudden cooling, and becomes hydrated very slowly when exposed to moist air or placed in water. It may prove to be of value as a refractory material.[2]

Magnesia.—Burnt Magnesite, "Magnesite" Bricks, MgO. Magnesia is even more refractory than lime, melting at perhaps 2,200° C., or 4,000° F. It is produced by burning magnesite (MgO, CO_2) thus driving off the carbon dioxide, in the same way that lime is produced from limestone. Although it resembles lime chemically, magnesia does not slake very easily, and when strongly burned it shrinks considerably, forming a heavy material very different from the light, chemically prepared magnesia which is used as a medicine. The shrunk magnesia can be cemented together to form a moderately strong fire-brick, which is extremely valuable for lining basic open-hearth furnaces and electric furnaces.[3] It is not easily fluxed by metallic slags, since it is basic in composition. On account of their great compactness (a brick weighs about 8 1/2 lb.), they are

[1] Boudouard apparently assumes the melting temperature of lime to be about 2,050° C. Journ. Iron and Steel Inst., 1905, i, p. 353.

[2] F. A. J. FitzGerald, Refractories, Met. and Chem. Eng., x, (1912), p. 129.

[3] C. W. Kanolt, *loc. cit.*, found one brand of magnesia brick to melt at 2,165° C. and pure magnesia would be somewhat more refractory.

very good conductors of heat, being about twice as good as fire-clay bricks, and in constructing electric furnaces of "magnesite" bricks an outer coating of some other material should be used to diminish the loss of heat, except when this cooling is desired to prevent the fluxing of the walls. Magnesite bricks are liable to crack under the influence of heat unless it is gradually applied. Their property of contracting when heated renders them unsuitable for building the arched roofs of furnaces, and silica bricks would be used for this purpose except in furnaces where the roof was exposed to a temperature at which they would melt.

Furnace linings may also be constructed of burnt magnesite in the form of powder; it is mixed with tar or pitch to make it bind, and rammed into place around a core by means of a hot iron-rod.

In making the bottoms of basic open-hearth furnaces, the burnt magnesite is mixed with a small proportion of open-hearth slag and applied in thin layers as in the process of making a sand bottom. For electric furnaces tar and pitch would be preferred as a bond, as the resulting lining would be less fusible. It is difficult, especially in small furnaces, to get a compact lining with the use of tar or pitch and some other bond such as clay, or boracic acid, may be employed. Magnesia does not combine with carbon to form a carbide, and on this account its use in the electric furnace is preferable to that of lime.

Austrian magnesite[1], which is very suitable for the hearths of basic open-hearth furnaces, has the following composition when burnt:

Magnesia.....	85.32 per cent.	Silica.....	2.84 per cent.
Lime.....	1.12 per cent.	Ferric oxide.....	8.57 per cent.
Alumina.....	0.93 per cent.	Carbon dioxide.....	0.50 per cent.

Grecian magnesite is purer and more refractory than the Austrian variety, and on this account it is less used in open-hearths, as it is difficult to frit it in place. For electric furnaces, where higher temperatures can be attained, Grecian magnesite should prove useful.

The shrinkage and consequent cracking of magnesite bricks and furnace linings when exposed to heat, is much reduced if the magnesite has been calcined at a very high temperature, in an electric furnace, or has even been fused electrically. Such magnesite is also almost free from any tendency to absorb carbon dioxide from the air. Elec-

[1] Harbison-Walker Refractories Co. "The Open-hearth Furnace and Process."

trically fused magnesia forms a very compact and refractory material for lining electric furnaces, or it may be applied as a paste mixed with silicate of soda to render ordinary fire-clay bricks more refractory.[1] It is cheaper, however, and equally satisfactory, to calcine the magnesia in a resistance furnace instead of fusing it.[2]

Dolomite.—This is a limestone containing a considerable proportion of magnesite, and when burnt it forms a valuable refractory material, which, like burnt magnesite, may be employed as a powder for furnace linings. It resembles magnesite, but is not quite so good. Burnt dolomite is liable to become slaked when exposed to the air, but of course far less rapidly than burnt lime. On this account and because it does not form so dense and vitreous a bottom as magnesite, open-hearth bottoms are usually made of magnesite, and dolomite is only used as a cheaper material for patching.

The following is an analysis of (unburnt) dolomite suitable (when burnt) for this use:[3]

Magnesia	17.31 per cent.	Alumina and iron	3.74 per cent.
Lime	29.20 per cent.	Loss on ignition	43.82 per cent.
Silica	5.52 per cent.		

Chromite, or chrome iron-ore, is a neutral refractory material (neither acid nor basic) and has a very high melting-point (about 2,180° C. or 3,950° F.)[1] in spite of the considerable percentage of iron which it contains. Its formula, when pure, is $FeO \cdot Cr_2O_3$.

An analysis of chromite quoted by Messrs. Harbison-Walker is as follows:

Chromium sesqui oxide, Cr_2O_3	38–40 per cent.
Ferric oxide, Fe_2O_3	17.5 per cent.
Alumina, Al_2O_3	24.5 per cent.
Silica, SiO_2	3.25 per cent.
Magnesia, MgO	15. per cent.

Chromite is used both in lump and powder for lining the crucibles of blast-furnaces for copper smelting, and in similar places where there is a corrosive slag which would corrode an acid or basic lining.

Chromite can be bonded, with clay or other binder, to make fire-

[1] Electrically shrunk magnesia, see paper by E. K. Scott, quoted Electrochemical Industry, vol. iii (1905), p. 140.

[2] FitzGerald, "Refractories," Met. and Chem. Eng., vol. x (1912), p. 129.

[3] Harbison-Walker, "A Study of the Open-hearth," 1911.

bricks. These are used in the open-hearth furnace at points which are especially exposed to the action of the flame. The melting-point of a chromite brick has been found to be 2,050° C. or 3,720° F.[1]

Although extremely refractory under oxidizing conditions such as obtain in the open-hearth furnace, the use of chromite and chrome bricks in the electric furnace is limited because the oxides of iron and chromium are reduced to metal when strongly heated in the presence of carbon.

In furnaces constructed partly of silica bricks, and partly of dolomite, or magnesite bricks, it would be expected that they would flux one another at the line of contact. On this account, a course of chromite brick is sometimes introduced as a parting layer between the two, as this brick, itself very refractory, does not easily flux with either acid (siliceous) or basic materials. When magnesite bricks are used, however, it is found that this precaution is unnecessary.

Bauxite is a hydrous oxide of alumina containing approximately:[2]

Alumina	60 per cent.	Silica	4–7 per cent.
Water	30 per cent.	Ferric oxide	3–5 per cent.

It is refractory, melting at about 1,820° C. or 3,300° F, and is plastic like clay. It cannot be used for furnace linings on account of its great shrinkage at furnace temperatures. When formed into bricks it constitutes a very valuable refractory material which is suitable for lining rotary cement-kilns and lead-refining furnaces where they are exposed to corrosive lead-slags. Alumina, the main constituent of bauxite, is sometimes regarded as a base and sometimes as an acid, in metallurgical practice. Bauxite may therefore be considered a neutral refractory material like chromite. The melting-point of pure alumina has recently been found to be 2,010° C. or 3,650° F.[3]

Alundum.[4]—This is electrically fused alumina made by purifying and fusing bauxite in the electric furnace. It is used as an abrasive but is also a valuable refractory material.

There are two forms, white and brown. The white is the purer, containing less than 1 per cent. of impurities, and is stated to melt

[1] C. W. Kanolt, *loc. cit.*

[2] Harbison-Walker, *loc. cit.*

[3] C. W. Kanolt, *loc. cit.*

[4] Alundum, see page 357. Met. and Chem. Eng., vol. viii (1910), p. 290. Saunders Am. Electrochem., vol. xix (1911), p. 333. FitzGerald Met. and Chem. Eng., vol. x (1912), p. 129.

between 2,050° C. and 2,100° C.[1] The brown variety contains 6 to 8 per cent. of impurities (oxides of iron, silicon and titanium) and melts not more than 50° C. below the white variety.

The crushed alundum powder is molded with the addition of clay or similar material into bricks, tubes, muffles, crucibles, etc. These products are very refractory, standing at least 1,950° C. before melting, but they are rather easily fluxed by slags, and are porous, so that they cannot be used for protecting pyrometers or constructing gas-tight furnaces. The thermal conductivity of molded alundum is high, being about twice that of porcelain and three or four times that of fire-clay. This renders alundum particularly suitable for the construction of muffles, and for the tubes of electrical tube-furnaces.

Alundum bricks have been tried instead of silica bricks for the roof of a high-temperature electrical furnace and have given good service; but on account of their high thermal-conductivity the alundum bricks must be covered with a layer of fire-bricks, or other refractory material of low conductivity, in order to prevent an excessive loss of heat. Alundum bricks do not stand very well however when used for the roof of an electric steel furnace; being destroyed by the lime-vapor rising from the charge.

Carbon.—(Coke, Charcoal, Graphite.) Carbon is the most refractory substance known; it has never been melted, but softens and volatilizes at the temperature of the electric arc, that is about 3,600° C., or 6,500° F.[2] In its more compact forms it is a fair conductor of electricity and of heat, the former quality together with its infusibility enabling it to be used for electrodes to lead the current into electric furnaces. Being combustible it is liable to waste away when exposed to the air at a red heat, and for the same reason it is corroded when exposed to slags that contain easily re-

[1] These figures must be too high if we accept Kanolt's figure of 2,010° C. for pure alumina.

[2] The temperature of the positive carbon of the electric arc was determined by Violle to be 3,500° C., and he modified this figure later to 3,600° C. (Wright, Electric Furnaces, p. 9). Le Chatelier obtained the figure 4,100° C. by his optical pyrometer (Le Chatelier & Boudouard High Temperature Measurements, p. 155). Lummer, by a radiation method gives the temperature as between 3,500° C. and 3,900° C. (Le Chatelier & Boudouard, p. 212). Féry has obtained the values 3,490° C., 3,869° C., and 3,897° C. by different optical methods (Wright, p. 277). The value 3,700° C. is adopted by Richards (Metallurgical Calculations, vol. i, p. 62), as the "boiling-point" of carbon. G. K. Burgess states the temperature as 3,600° C. ± 150°, Met. and Chem. Engng., x, 1912, p. 692.

ducible metallic oxides. Carbon exists in the three different forms of amorphous carbon, graphite and diamond; charcoal, coke and the other common forms of carbon being of the amorphous variety. When amorphous carbon or the diamond are heated to the temperature of the electric arc, they are changed into graphite. Carbon blocks, composed of coke or graphite, can be used for lining furnaces, provided they are not exposed to air or to oxidizing slags, but carbon has not been much used for metallurgical furnace linings. In the electric furnace it is often employed, forming a lining which also serves as an electrode, as in the Héroult iron-smelting furnace, Fig. 78, the aluminium furnace, Fig. 5, and the Willson carbide furnace, Fig. 7; but it cannot usually be employed for the entire lining, because it is so good a conductor of electricity that the current would tend to be short-circuited by the lining instead of passing through the charge or resistor in the furnace. Coke-powder can be used for lining parts of furnaces, using pitch or tar as a binder, and such linings will conduct the electric current and may be used as electrodes. In experimental work a lining of charcoal-powder cemented with molasses and water may sometimes be used, and has the advantage that it retains the heat of the furnace very well, and being a poor electrical conductor, it can be used for the entire lining without fear of short-circuiting the current. If exposed to the air, however, it will burn up completely if it once reaches a red heat. Graphite is a better conductor of electricity and of heat than amorphous carbon, and is less easily oxidized by air or metallic slags; hence, electrodes are often composed of it. Graphite is often used in the construction of crucibles, the graphite being mixed with its own weight of fire-clay. The graphite renders the fire-clay refractory, and the fire-clay protects the graphite from oxidation. These crucibles are not so refractory as the graphite alone, and for electric-furnace experiments, crucibles may be cut out of a block of graphite or retort carbon.

For lining electric furnaces, when carbon is undesirable, some products of the electric furnace itself are very suitable. They are not so refractory as carbon, but are more refractory than the other furnace materials such as magnesia, silica, lime or alumina.

Carborundum.[1]—This is produced by heating silica and carbon

[1] The Carborundum Furnace, F. A. J. FitzGerald, Electrochemical Industry, vol. iv (1906), p. 53.

The Electrochemical Industries of Niagara Falls, F. A. J. FitzGerald, Electrochemical Industry, vol. iii, p. 253.

to a very high temperature in the electric furnace. It is a crystallized compound of silicon and carbon having the formula SiC, and besides being valuable as an abrasive, it forms a very refractory furnace-lining. The carborundum powder can be made to cohere by the use of fire-clay (6 parts of the powder to 1 of fire-clay), or by a solution of silicate of soda, or water glass, which should be very dilute if the highest temperatures are to be reached, as the silicate of soda makes the carborundum less refractory. Tar or glue can also be used as binding materials, and a very strong brick can be obtained by using glue as a temporary cement and exposing the molded article to an oxidizing atmosphere at a high temperature for some hours, when the partial oxidation of the carborundum furnishes silica which acts as a permanent bond.

Carborundum Fire-sand.—This is a name applied to the uncrystallized variety of carborundum, which is found in the cooler parts of the carborundum furnace. It only differs from carborundum in not being crystallized, and can be used in the same manner as a refractory material.

Crystolon[1] is a trade name given to the carbide of silicon manufactured by the Norton Company and refers particularly to the crystalline variety.

Silicon carbide powder may be bonded, as explained above under carborundum, with a clay bond or with a temporary binder such as glue or dextrine. In the latter case the article is heated in an electric furnace until the carbide recrystallizes, yielding a strong, very refractory product, known as "pure crystolon."

Crystolon is a better conductor of heat than most refractory materials and on this account it must be provided with a heat retaining backing. When heated it becomes a fair conductor of electricity and care must therefore be taken not to place it where it can short-circuit the electric current passing through the furnace.

Silundum.[2]—This is a form of carbide of silicon prepared by heating a piece of carbon in the vapor of silicon, so that the carbon is converted into carbide. This is mostly used as a resistor (see pages 90 and 296) but it can also be employed as a refractory material.

Refractory Materials in Electrical Resistance Furnaces, F. A. J. FitzGerald, Electrochemical Industry, vol. ii, (1904), p. 439.

Refractory Materials for Furnace Linings, E. K. Scott, Electrochemical Industry, vol. iii (1905), p. 140.

[1] FitzGerald, Met. and Chem. Eng., vol. x (1912), p. 129.

[2] Silundum, F. Bolling, Electrochem. and Met. Ind., vol. vii (1909), p. 24.

Siloxicon.[1]—This is made in the same manner as carborundum, but less carbon is used in the charge, with the result that the silica is not completely reduced, and the resulting substance retains some oxygen. The composition is not constant, as a series of compounds are formed, but a typical formula is Si_2C_2O. This forms a refractory material for lining furnaces, and may be made to cohere by grinding it to powder, moistening the powder with water, pressing it into a mold, and strongly firing the molded material. The firing probably oxidizes the siloxicon grains superficially, forming silica which acts as a bond. Siloxicon is said to be unaffected by acid or basic slags, or by molten iron, but although this may be true at moderate furnace temperatures it can scarcely hold at the higher temperatures of the electric furnace.

The silicon carbides, although very refractory, are slowly oxidized at high temperatures in the presence of air; siloxicon oxidizing when heated above 1,470° C., or 2,674° F. Carborundum was for a long time thought to be unoxidizable, but it has been found to oxidize slowly at high temperatures.

These substances are far less refractory than carbon, being dissociated into graphite and silicon vapor at high electric-furnace temperatures.[2] They can be used in some forms of electric furnace

TABLE V.—REFRACTORY MATERIALS

Material	Melting temperature	
Fire-clay brick. Kaolin with additional silica	1,600° C. to 1,730° C.	2,900° F. to 3,150° F.
Silica-brick. Silica with binding material	1,700° C.	3,100° F.
Silica (pure)	1,750° C.	3,180° F.
Bauxite (impure alumina)	1,820° C.	3,300° F.
Alumina (pure)	2,010° C.	3,650° F.
Lime (pure) about	2,050° C.	3,700° F.
Chrome-brick	2,050° C.	3,700° F.
Chromite	2,180° C.	3,950° F.
Magnesia-brick	2,150° C.	3,900° F.
Magnesia (pure) about	2,200° C.	4,000° F.
Carborundum, SiC decomposes	2,200° C.	4,000° F.
Carbon vaporizes rapidly	3,600° C.	6,500° F.

[1] Oxidation of Siloxicon, E. G. Acheson, Electrochemical Industry, vol. i, p. 373.

Siloxicon Brick, Electrochemical Industry, vol. i, pp. 287 and 373; vol. ii, p. 442; vol. iii, p. 445; vol. iv, p. 40.

[2] S. A. Tucker and A. Lampen, Amer. Chem. Soc., vol. xxviii, p. 858, find the dissociation temperature of carborundum to be 2,220° C.

as a layer protecting a less refractory material such as fire-clay or magnesite-brick; and applied as a paint, mixed with silicate of soda, they improve very materially the lasting qualities of fire-clay bricks in ordinary metallurgical furnaces.

THERMAL CONDUCTIVITY OF FURNACE MATERIALS

In addition to its ability to resist high temperatures and corrosive slags, the power of a furnace-lining to retain the heat which is produced in the furnace must be considered. It is rare that good refractory and heat-retaining qualities are combined in the same material, and to get the best effect it is usually necessary to adopt a stratified construction, placing refractory materials on the inside, and heat-retaining materials outside. Generally speaking, light porous substances are good retainers of heat, while heavy compact bodies are poor heat-insulators.[1]

Furnaces have in general been designed empirically and no calculation has been made, in advance, to show what loss of heat would take place by conduction through the walls, and what efficiency might be expected. During the last few years the methods of calculation have been improved and simplified[2] and some additional experimental data have been ascertained. Before very long we may expect to have a complete set of data available, and that electric furnaces, and to a less extent fuel-fired furnaces, will be designed in a scientific manner like a steam engine or electric generator.

Until recently very little information was available with regard to the rate of flow of heat through the materials of furnace walls, and the calculation of the flow of heat from such data as were available was not well understood.

Heat being measured in gram-calories, pound-calories, British thermal units, etc. (See page 44) the flow of heat has usually been stated in grain-colories per second (or in similar units) corresponding for example, to the flow of water in gallons per minute.

The flow of heat through a piece of brickwork depends on the area and thickness of the wall through which the heat passes, on the difference of temperature between the two sides of the wall and on the thermal conductivity of the brickwork.

[1] See also a paper by Hutton and Beard on Heat Insulation. Electrical Rev., N. Y., July 22, 1905, and Eng. Record, Nov. 25, 1905.

[2] We are largely indebted for this improvement to a number of valuable papers by Dr. Carl Hering. A list of these papers has been given on page 75.

If AB (Fig. 26) is a cube of unit edge (1 in. or 1 cm.) and if the face A is kept 1° hotter than the face B, and if no heat enters or leaves the cube through its remaining four faces, heat will flow steadily from A to B and the amount of this flow is numerically equal to the thermal conductivity of the material. If, as is usual, our units are centimeters, grams, seconds, and Centigrade degrees, the conductivity, k, would be stated as so many gram-calories per second for a centimeter cube, for one Centigrade degree difference of temperature.

It has been found that the flow of heat through a body is proportional to the difference of temperature causing the flow (just as the flow of electricity is proportional to the electromotive force) and it

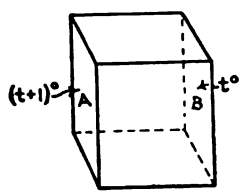

FIG. 26.—Flow of heat through unit cube.

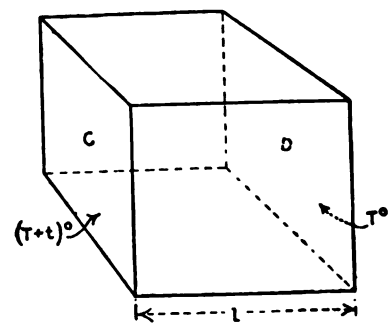

FIG. 27.—Flow of heat through section of wall.

can easily be shown that the flow will be proportional to the area of the wall and inversely proportional to the thickness of the wall through which it flows, just as in the flow of electricity.

If then CD (Fig. 27) is a section of a wall through which the heat flows from C to D the flow of heat H will be given by the equation:

$$H = kt\frac{S}{l}$$

Where k is the thermal conductivity, t is the difference of temperature between C and D, S is the area of each of the faces C and D and l is the thickness of the wall. It is understood in this case that C and D are equal and parallel and that the flow of heat is perpendicular to these faces.

In calculating the loss of heat from a furnace we are met by the difficulty that the outer surfaces of the furnace walls are greater than the inner surfaces and that the flow of heat through these walls

is not parallel but radiating. The above formula cannot be applied directly as it is not easy to see what is the effective area of each wall. This difficulty is especially serious in the case of small furnaces with thick walls.

Fig. 28 represents a section through a cubical furnace. The inner surface A of one wall is at a temperature $(T+t)^\circ$ and the outer surface B at a temperature T°. The areas are s and S respectively and the thickness of the wall is l. The heat flow will be radiating, as shown by the figure, and we wish to calculate the total flow of heat through the wall from the known conductivity of a unit cube of the material composing it.

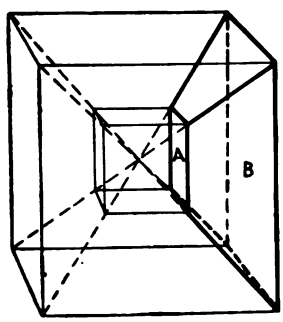

FIG. 28.—Flow of heat through side of hollow cube.

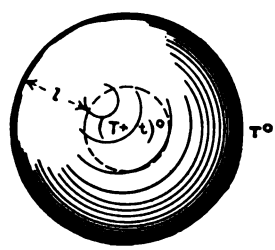

FIG. 29.—Flow of heat through wall of hollow sphere.

It can be shown mathematically[1] that the flow of heat from A to B will be given correctly by the formula:

$$H = kt\frac{\sqrt{sS}}{l}$$

In other words the effective area of the wall AB is the geometrical mean of its inner and outer surfaces. The same applies of course to the remaining walls of the cube.

The same formula applies correctly in the case of a spherical furnace, Fig. 29, having an inner area s and outer area S.

The calculation of the flow of heat from most electric furnaces can be made without serious error by assuming the walls to be parts of a cubical or a spherical furnace.

The flow of heat through a cylindrical wall (without ends) is given by the more complicated formula:

[1] Carl Hering, Heat Conductances through Walls of Furnaces. Trans. Am. Electrochem. Soc., vol. xiv (1908), p. 215.

$$H=\frac{kt}{l}\frac{S-s}{2.303(\log S-\log s)}$$

This formula would only be needed in the case of a very long cylindrical furnace and would then be applied to the cylindrical part remote from the ends. Each end with a short piece of the adjacent wall would be considered as the half of a sphere or cube.

An approximate formula for the flow of heat through a cylindrical wall is given by the equation:[1]

$$H=kt\frac{S+s}{2l}\left(1-\frac{l}{10d}\right)$$

Where d is the internal diameter of the cylinder, and l its thickness.

In the above formulæ it has been assumed that the conductivity, k, is a constant, although it is well known that the thermal conductivity of fire-bricks and similar materials increases very considerably with a rise of temperature. The correct calculations are made by using the above formulæ with the "effective" value of k which has been shown to be approximately the value of k corresponding to the temperature $(T+t/2)^\circ$, for a conductor whose ends are at T° and $(T+t)^\circ$ respectively.[2]

The thermal conductivity of furnace materials is found by measuring the flow of heat through a slab of the material of definite dimensions having the opposite faces at two definite temperatures, and these temperatures are mentioned in stating the result. Thus the conductivity of fire-brick is given as 0.0014 (C.G.S. units) between the temperatures 0° and 500° C. and 0.0031 between 0° and 1,300° C. These values are not the conductivities at 500° and 1,300°, but the effective conductivities over the specified ranges. Very little is known with regard to the variation of conductivity with temperature, but the conductivity rises with the temperature and in some cases appears to be nearly proportional to the absolute temperature.

Making the assumption that the thermal conductivity of refractory materials is a linear function of the temperature the following rule can be deduced:

In the case of any conductor, whether parallel or flaring, the effective

[1] Carl Hering, *loc. cit.*

[2] Carl Hering, "Effects of the Variations of Thermal Resistivities with the Temperature." Trans. Am. Electrochem. Soc., xxi, 1912, p. 511. Dr. Hering's formula is $\frac{T+T'}{2}$ for a conductor whose ends are at T° and $(T')^\circ$.

conductivity is that corresponding to the mean of the two extreme temperatures.[1]

In the case of a parallel conductor, AB, Fig. 30, this means that the flow of heat from A to B is given by the equation:

$$H = kt\frac{S}{l}$$

Where k is the conductivity of the material at the temperature $(T+t/2)^\circ$

The experimental data give the effective conductivities between certain temperatures; thus as stated above, the conductivity of fire-bricks between 0° and 500° is 0.0014 C.G.S. units. By means of the rule we can interpret this to mean that the conductivity of

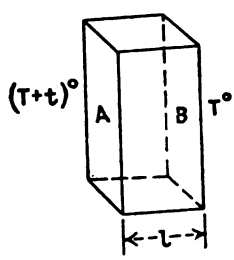

FIG. 30.—Parallel conductor at varying temperatures.

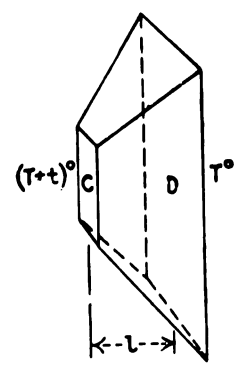

FIG. 31.—Flaring conductor at varying temperatures.

fire-brick is 0.0014 at 250° C. Similarly it is 0.0031 at 650° C. From these two results we can obtain a general formula:

$$k_t = 0.000{,}34 + 0.000{,}004{,}25t$$

If only one determination were available we would use it to obtain the constant a in the expression:

$$k_t = a\left(1 + \frac{t}{273}\right),$$

assuming that the conductivity is proportional to the absolute temperature.

In the case of a flaring conductor—such as CD, Fig. 31, which

[1] Carl Hering, *loc. cit.*

represents one wall of a cubical furnace, it was shown that if the conductivity of the material were constant, that is independent of the temperature, the flow of heat from C to D would be given by the equation:

$$H = kt\frac{\sqrt{Ss}}{l}$$

where t is the difference of temperature and s and S the inner and outer surfaces. Diagrammatically this may be taken to mean that the flow of heat from C to D will be equal to the flow in a parallel conductor AB (Fig. 30) having the same length l, the same difference of temperatures t, and a uniform cross-section equal to $\sqrt{s\,S}$. If now the thermal conductivity varies with the temperature and may be assumed to be a linear function of it, the flow of heat from C to D (Fig. 31) will be equal to the flow from A to B (Fig. 30) if the conductivity of AB is throughout equal to the conductivity of the material of CD for the temperature $(T+t/2)^\circ$.

Thermal conductivities have usually been stated in gram-calories per second for a centimeter cube with one degree Centigrade difference of temperature, but for electrical work it is more convenient to express the flow of heat in watts, one watt being equal to 0.239 grm.-calories per second. The conductivity would then be expressed as so many watts for a centimeter cube for unit difference of temperature.[1]

The thermal resistivity of a substance is the reciprocal of its conductivity (as in electrical measurements) and the term "thermal ohm" has been given to the unit of thermal resistivity based on the watt.[2]

The *thermal ohm* is the thermal resistance of a body through which unit difference of temperature produces a flow of heat equal to one watt.

The corresponding unit of thermal conductance[3] is the *thermal mho* and is the conductance of a body through which unit difference of temperature produces a flow of heat equal to one watt.

[1] Carl Hering, Met. and Chem. Eng., viii, 1910, p. 676.

[2] Carl Hering, "Thermal Resistance and Conductance; the Thermal ohm and Thermal Mho.," Met. and Chem. Eng., ix, 1911, p. 13.

[3] In regard to the use of these terms is should be noted that as in electrical matters: Resistivity is the resistance of a unit cube of the substance, and replaces the older term "specific resistance." "Conductivity" is the "conductance" of a unit cube.

Ohm's law holds in regard to the flow of heat just as in electrical matters.

If a conductor of heat has a thermal resistance R (in thermal ohms) and a difference of temperature t (in Centigrade degrees) between the ends, the flow of heat H, in watts, is given by the equation:

$$H = \frac{t}{R}$$

Table VI is a collection of experimental data on the thermal conductivity and resistivity of furnace materials.

The values have been given in conductivities (C.G.S. units) to allow of easy comparison with other published data, and in thermal ohms as these are the most useful in electric-furnace calculations. The resistivities have been expressed in terms of the inch cube, as well as the centimeter cube, as inches are still in very general use.

It will be understood that a material having a high conductivity for heat, as shown in the table, would, if used in the construction of a furnace wall, allow a considerable amount of heat to escape and be wasted. Light powders like infusorial earth are good for retaining the heat in a furnace, but they do not keep their heat-insulating qualities at high temperatures and should only be used as an outer jacket to the furnace. Undoubtedly much could be gained in ordinary furnaces by a more careful attention to the heat-conducting qualities of the materials of which the walls are composed, and in electric furnaces, where the cost of the heat is usually considerably greater, it is even more important to guard as far as possible against loss. On the other hand, cases are common in large fuel-fired furnaces, and occur even in electric heating, where the importance of preserving some portion of the furnace, that is exposed to corrosive slags or very high temperatures, is greater than the need to save the heat, and in such cases, air-cooling, and even water-cooling of the furnace walls may be adopted. It should be remembered that the rate of loss of heat from a furnace will be proportional to the area of its walls, that is, to the square of the linear dimensions. The ratio of heat-loss per unit volume will, therefore, be inversely proportional to the dimensions of the furnace, or a furnace that is twice as large as another (in linear dimensions) will only have half as large a heat-loss, for a given volume of the interior of the furnace. This supposes the furnace walls to be of equal thickness in the two furnaces, but in small experimental furnaces the walls are usually thinner than they are in full-sized furnaces, and under

TABLE VI.—THERMAL CONDUCTIVITY AND RESISTIVITY

Material	Reference	Temperature range C.	Conductivity I C.G.S. units	Resistivity II Thermal ohms for 1-cm. cube	Resistivity III Thermal ohms for 1-in. cube
Copper	H.	100°– 837°	0.88	0.27	0.11
Iron (wrought)	H.	100°– 400°	0.22	1.1	0.43
		100°–1,245°	0.18	1.3	0.49
Graphitized carbon electrodes	H.	100°– 400°	0.34	0.71	0.28
		100°– 900°	0.29	0.82	0.32
Amorphous carbon electrodes	H.	100°– 360°	0.088	2.7	1.05
		100°– 940°	0.127	1.9	0.72
Graphite-clay brick	W.	300°– 600°	0.024	10.0	3.9
Carborundum brick(clay bond) (1300°)[1]	W.	200°– 600°	0.023	10.4	4.1
Magnesia brick (1300°)[1]	W.	200°– 900°	0.0071	34	13
Chromite brick (1300°)[1]	W.	150°–1,000°	0.0057	42	17
Alundum brick	.....	.....	0.004	60	24
Bauxite brick (1300°)[1]	W.	170°–1,100°	0.0033	72	28
Fire-clay brick	R.	0°– 500°	0.0014	170	67
Fire-clay brick	R.	0°–1,300°	0.0031	77	30
Fire-clay brick 66 per cent. silica (1300°)[1]	W.	200°–1,000°	0.0042	57	22
Silica brick (1300°)[1]	W.	150°–1,000°	0.0031	77	30
Building bricks	W.	100°–1,000°	from 0.0023	100	40
			to 0.0035	67	27
Kieselguhr brick	W.	100°– 900°	0.0018	133	52
Quartz sand (coarse)	O.H.	20°– 155°	0.00085	280	110
Brick dust (sifted)	P.H.	.....	0.00046	518	204
Asbestos (36 lb. per cubic foot)	N.H.	at 50°	0.00057	422	166
" " " "	N.H.	at 600°	0.00043	562	221
Infusorial earth (21.8 lb. per cubic foot).	N.H.	at 50°	0.00017	1,430	562
	N.H.	at 350°	0.00022	1,090	427

[1] This is the temperature, in Centigrade degrees, at which the material was burned.

Notes on Table

Column I shows the flow of heat in gram-calories per second through a cube of 1-cm. edge due to a difference of temperature of 1° C.

Column II shows the difference of temperature in Centigrade degrees that would be required to produce a heat-flow of 1 watt through a cube of 1-cm. edge.

Column III is the same as column II but for a cube of 1-in. edge.

The figures in column II are obtained by dividing 0.239 by the figures in column I.

The figures in column III are obtained by dividing the figures in column II by 2.54.

References

H. Det. by Carl Hering, Met. and Chem. Eng., vol. ix (1911), p. 653.
N.H. Det. by Nusselt, quoted by Hering, *loc. cit.*
O.H. Det. by Ordway, quoted by Hering, *loc. cit.*
P.H. Det. by Peclet, quoted by Hering, *loc. cit.*
R. Richards' Metallurgical Calculations, vol. i, pp. 183–4.
W. Det. by Wologdine, Met. and Chem. Eng., vol. vii (1909), p. 383.

Papers by Carl Hering on the Theory of Thermal Conductivity

"Heat Conductances through Walls of Furnaces." Trans. Am. Electrochem. Soc., vol. xiv (1908), p. 215.

"Heat Conductance and Resistance of Composite Bodies." Electrochem. and Met. Ind., vol. vii (1909), p. 11.

"Heat Conductivities in the Calculation of Furnaces." Electrochem. and Met. Ind., vol. vii (1909), p. 72.

"Thermal Resistance and Conductance; the Thermal Ohm and Thermal Mho." Met. and Chem. Eng., vol. ix (1911), p. 13.

"The Flow of Heat through Bodies." Met. and Chem. Eng., vol. ix (1911), p. 652.

"Flow of Heat through Contact Surfaces." Met. and Chem. Eng., vol. x (1912) p. 40.

"The Thermal Insulation of Furnace Walls." Met. and Chem. Eng., vol. x (1912), p. 97

"The Flare of Furnace Walls." Met. and Chem. Eng., vol. x (1912), p. 159.

"Effects of the Variations of Thermal Resistivities with the Temperature." Trans. Am. Electrochem. Soc., vol. xxi (1912), p. 511.

these conditions the small furnace fares even worse in proportion. In the extreme case of a small furnace constructed as an exact model on a scale of one inch to the foot of a large furnace, the heat-loss, for each cubic inch of the model, would be 144 times as great as from the large furnace, provided, of course, that both attained the same temperature. In other words if the furnaces were merely being kept hot, no work being done in them, the small furnace would need 144 times as much heat per cubic inch as the large furnace in order to keep it heated to the same temperature.

Some very careful work on the thermal conductivity of refractory materials has been done by S. Wologdine (reference in notes to table) and he shows that the conductivity increases with the temperature at which the brick has been burnt.

The determination of the thermal resistivity of a brick is usually made by heating one side of the brick by means of a flame and allowing the heat that flows through the brick to pass into a calorimeter which is applied to the other side of the brick. Thermo-couple pyrometers are used to determine the temperature of both sides of the brick, the flow of heat is measured by the calorimeter, and the thickness and effective cross-section of the part of the brick through which heat enters the calorimeter is known. The thermal conductivity can be calculated from these data. In such tests it is necessary to allow the heat to flow for some hours, until the temperature at each point in the brick becomes perfectly steady, before making an observation.

Another method is to construct a furnace of the material to be tested and to generate heat, electrically, inside the furnace. When the temperature in the furnace has become steady, the flow of heat through the walls is equal to the power supplied to the furnace. The temperature of the inner and outer surfaces of the furnace must then be measured, and from these observations and the dimensions of the furnace, the thermal conductivity of the brickwork can be calculated.

The loss of heat from an electric furnace depends mainly on the thermal conductance of the furnace walls, but it is modified by what is known as the "contact resistance" between the outside of the furnace walls and the surrounding air, and between the inside of the walls and the hot gases or other materials within the furnace. Thus if the gases within an electric furnace were at 1,500° C., and the outer air was at 20° C., the inside of the furnace walls would not be at 1,500° C., but at some lower temperature, say

1,450° C., and the outside of the furnace walls would not be at 20° C., but at some higher temperature, say 100° C. These differences of temperature between the walls and the adjacent gases are due to the thermal resistance at the contact, and the flow of heat through the wall is less than it would be if the inside of the wall were at 1,500° C. and the outside at 20° C.

If we can measure the temperatures of the inside and the outside of the walls we can calculate the flow of heat through the walls and this gives us the whole loss of heat. If, however, we only know the temperature of the gases in the furnace and of the air outside the furnace, we shall need to know the thermal resistance of the contacts, before we can calculate the loss of heat.

The conductivity and resistivity determining the flow of heat through contact surfaces are expressed in a manner similar to the thermal conductivity and resistivity of conducting bodies, except that contact conductivity and resistivity are expressed in terms of the unit square of contact surface instead of the unit cube of conducting material.[1]

RADIATION AND CONVECTION OF HEAT

The loss of heat from the outside of a furnace is due partly to *conduction*—that is, the transfer of heat (by molecular motion) to immediately adjacent bodies, such as the supporting masonry and the air surrounding the furnace; and partly to *radiation*—that is, the transfer of heat from the furnace by vibrations in the luminiferous ether. Radiant heat passes with little loss through air and other gases but is partly reflected and largely absorbed when it meets solid or liquid substances.

The loss of heat by conduction through solid substances has already been considered. The loss of heat by conduction to the surrounding air is very greatly increased by "*convection*"—that is, the movement of the heated air away from the furnace, carrying with it the heat which it received by conduction from the furnace walls.

The loss of heat by radiation is very small from polished metals and varies considerably with different metals and their degree of polish, but in the case of rough substances, such as the black iron-work, or brick work, of which furnaces are built, the rate of loss is almost independent of the nature of the radiating

[1] Numerical values are given in Table VII.

surface. The rate of loss from such a body at 100° C., placed in a vacuum, so that there is no loss by convection, and surrounded by bodies at 0° C. is about 0.015 grm.-calories per second for each square centimeter of radiating surface. The rate of loss is proportional to the difference between the fourth powers of the absolute temperature (273+C°) of the hot body and that of surrounding bodies. Hence it is possible to calculate the loss by radiation from a hot body if its temperature and that of surrounding reflecting or radiating bodies are known.

The loss of heat by conduction and convection depends to some extent on the nature of the heated body, but to a greater extent on the fluid that serves to carry the heat away. The rate of loss can be determined if we know the contact resistivity, that is the difference of temperature, in degrees Centigrade, between the hot body and the surrounding fluid, that would cause a flow of 1 grm.-calorie per second from each square centimeter of the hot surface. In the case of the conduction and convection of heat from metal to air the resisitivity is given by the expression[1] $R=\frac{36,000}{2+\sqrt{v}}$, in which v denotes the velocity of the air in centimeters per second.

If, as in the previous case, the hot body were at 100° C. and its surroundings at 0° C., and if the velocity of the air were 10 cm. per second (caused by the heat from the hot body), the contact resistivity, R, would be $\frac{36,000}{2+\sqrt{10}}=7,000$ and the rate of loss of heat from each square centimeter of the heated surface would be $\frac{100°-0°}{7000}$ =0.014 grm.-calorie per second. The loss by radiation was 0.015 grm.-calorie per second, making a total loss of 0.029 cal. per second per square centimeter.

If now the hot body were at 200° C., with surroundings at 0° C. as before, the rate of loss of heat by radiation would be:

$$0.015\times\frac{(473)^4-(273)^4}{(373)^4-(273)^4}=0.048 \text{ grm.-calorie per second.}$$

The loss of heat by conduction and convection, assuming the velocity of the air to be 15 cm. per second, would be:

$$(200°-0°)\div\frac{36,000}{2+\sqrt{15}}=\frac{200}{6,100}=0.033$$

[1] Richards "Metallurgical Calculation," vol i, p. 179.

The whole loss of heat will in each case be the sum of the losses by radiation and by conduction and convection, namely 0.029 at 100° C. and 0.081 at 200° C.

In the case of electric furnaces where the loss of heat is partly by radiation and partly by air convection, and when the motion of the air is only that caused by the heat of the furnace, it is possible to obtain a figure for what may be termed the effective contact resistivity, governing the whole transfer of heat from a hot body to the air and surrounding bodies.

The following table shows the rate of loss of heat from the outside of furnaces surrounded by air at 20° C. The loss is given in watts per square inch and kilowatts per square foot of the surface when this is at various temperatures. The contact conductivity would be obtained by dividing this flow of heat by the difference of temperature causing it, and the reciprocal of this is the contact resistivity which is given in the table. The contact resistivity is the difference of temperature, between the furnace and the surrounding air, divided by the flow of heat from unit area of the surface.

TABLE VII.—FLOW OF HEAT AND CONTACT RESISTIVITY[1]
(From heated brick and iron to air at 20° C.)

	Flow of heat		Contact resistivity		
	K. W. per square foot	Watts per square inch	C. G. S. units	Thermal ohms per square centimeter	Thermal ohms per square inch
Brick at 90° C.	0.09	0.63	3,020	722	112
110° C.	0.13	0.90	2,700	645	100
150° C.	0.20	1.4	2,540	607	94
190° C.	0.30	2.1	2,190	523	81
220° C.	0.39	2.7	2,000	477	74
Iron at 90° C.	0.08	0.56	3,400	812	126
110° C.	0.11	0.76	3,180	760	118
150° C.	0.18	1.25	2,810	671	104
190° C.	0.27	1.9	2,460	587	91
220° C.	0.34	2.4	2,300	548	85

The loss of heat from bricks at 100° C. surrounded by air at 0° C. would be:

$$\frac{100^\circ - 0^\circ}{2860} = 0.035 \text{ grm.-calorie per second for 1 sq. cm.}$$

[1] Compiled from data by F. T. Snyder, Am. Electrochem. Soc., xviii, 1910, p. 239. The flow of heat was calculated from these data by Carl Hering, Met. and Chem. Eng., x, 1912, p. 41.

and if the bricks were at 200° C., the loss would be:

$$\frac{200^\circ - 0^\circ}{2130} = 0.094 \text{ calorie per second for 1 sq. cm.}$$

These figures do not agree exactly, but are of the same order as those previously obtained, namely 0.029 and 0.081, respectively.

In calculating the loss of heat from a furnace we determine the thermal resistance of the furnace wall, and add the contact resistance from the walls to the surrounding air. Dividing the difference of temperature between the interior of the furnace and the external air, by the total resistance in thermal ohms, will give the loss of heat in watts. In doing so we are neglecting the contact resistance within the furnace, but this is probably very low and its omission does not cause any serious error.

Instead of stating the contact resistivity from a furnace wall to the surrounding air it is sometimes convenient to state the loss of heat in watts from each square inch of the surface. The loss of heat, in watts, is equal to the difference of temperature divided by the resistivity in thermal ohms.

If the surroundings are at 20° C. the rate of loss of heat will be about 1 watt per square inch at 120° C., and 3 watts per square inch or 0.4 kw. per square foot at 230° C. At a dull red heat the loss will be about 7 to 11 kw. per square foot and at a bright red heat 12 to 15 kw. per square foot.[1]

F. A. J. FitzGerald[2] built a furnace 4½-in. cube inside and 2½ in. thick to determine the loss of heat through furnace walls. The furnace, Fig. 32, was heated by a nichrome resistor, and the internal temperature corresponding to a definite rate of heat production was measured. Tests were made with the furnace composed of several kinds of refractory materials. In one test, with the furnace built of firebricks, the internal temperature was 825° C. It will be of interest to calculate the probable loss of heat from this furnace and to compare the result with the observed rate of heat production.

This furnace was not quite regular in outline but may be assumed to be a 9 1/2-in. cube externally, the surrounding air being assumed to be at 25° C.

[1] Carl Hering, Met. and Chem. Eng., Jan., 1912, vol. x, p. 41. F. T. Snyder, Am. Elctrochem. Soc., vol. xviii, p. 239. Richards, Metal Calculations, vol. i, Chap. viii.

[2] FitzGerald, "Experiments in Heat Insulation," Am. Electrochem. Soc., 1912, vol. xxi, p. 535.

The furnace is composed of six faces each having an inner surface of 4.5 in. square or 20.2 sq. in., and an outer surface of 9.5 in. square or 90 sq. in. The effective area is:

$$\sqrt{20.2 \times 90} = \sqrt{1{,}818} = 42.6 \text{ sq. in.}$$

As the heater in this furnace is not in contact with the walls there

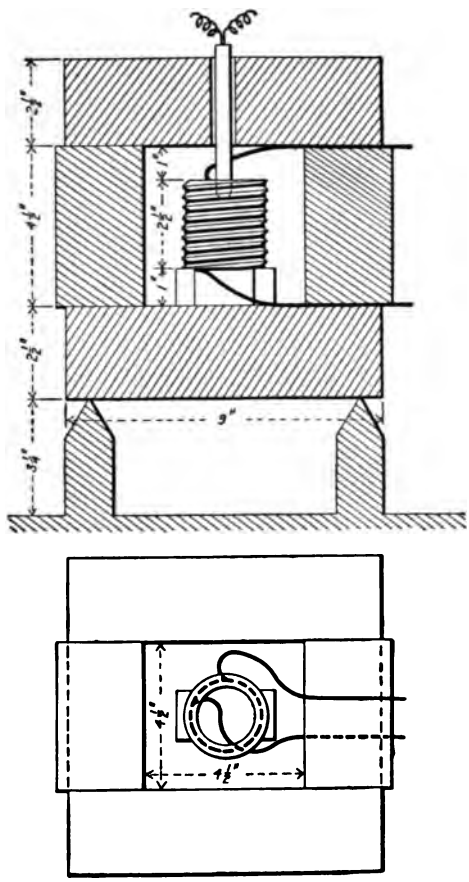

FIG. 32.—Furnace for testing heat-losses.

will be a contact resistance between the heated gases within the furnace and the inside of the furnace walls. We have no reliable figure for the contact resistivity at this temperature, but assuming it to be 30 thermal ohms per square inch there will be a resistance

for one face of $\frac{30}{20.2} = 1.49$ ohms. The resistivity of the brick wall will be about 40 thermal ohms for 1 in. cube giving a resistance for one face of $40 \times \frac{2.5}{42.6} = 2.35$ ohms. The external contact resistivity may be about 85 ohms per square inch giving a resistance of $\frac{85}{90} =$ 0.94 ohm.

The total resistance per face $= 1.49 + 2.35 + 0.94 = 4.78$ ohms. This gives a heat loss for the whole furnace of $\frac{800 \times 6}{4.78} = 1{,}000$ watts. This agrees sufficiently well with the actual loss, which was equal to the rate of heat production—900 watts.

The temperature of the outside face of the furnace will be

$$25^\circ + \left(800^\circ \times \frac{0.94}{4.78}\right) = 182^\circ \text{ C.}$$

That of the inside face will be

$$25^\circ + \left(800^\circ \times \frac{3.29}{4.78}\right) = 575^\circ \text{ C.}$$

As a further example we may calculate the loss of heat from the Héroult steel furnace, Fig. 93, referred to on page 214. In this case we may assume the whole interior of the walls and roof to be at 1,500° C., the gases above the molten charge being at a higher temperature. In this furnace the roof is thinner than the walls and bottom of the furnace and of a different material, and in consequence the calculation will be somewhat more complicated.

The roof is 9 in. thick of silica brick having a resistivity (between 1,000° and 150° C.) of 30 thermal ohms for 1-in. cube. Its inner surface is 84 in. × 50 in. = 4,200 sq. in. We may assume that the flare corresponds to an angle of 45° making an external surface of 102 in. × 68 in. = 6,900 sq. in., or a mean area of $\sqrt{4{,}200 \times 6{,}900} = \sqrt{29{,}000{,}000} = 5{,}400$ sq. in. The resistance is $30 \times \frac{9}{5{,}400} = 0.05$ thermal ohm. The contact resistance, assuming an external temperature of 400° C., will be about 40 thermal ohms per square inch or $\frac{40}{6{,}900} = 0.006$ ohm for the whole surface. The total resistanec of the roof will therefore be 0.056 ohms and the flow of heat $\frac{1500^\circ - 30^\circ}{0.056} = 26$ kw. It will be noticed that we have not taken any

account of the loss of heat by conduction along the electrodes, but on the other hand have included their area as part of the roof. The conduction of heat along the electrodes should be calculated separately, see page 99.

The walls and bottom are made of dolomite bricks and crushed dolomite. We have no figure for the resistivity of this, but that of magnesite bricks is 13 thermal ohms (from 200° − 900°) and we may assume it to be a little higher, say 20; ordinary fire-bricks being 22. The bottom may be taken as 80 in. × 45 in., the sides 80 in. × 24 in. and the ends 45 in. × 24 in. inside. The thickness may be taken as 12 in. and the external dimensions each 24 in. more than the internal. The effective area of the whole of these will be 15,200 sq. in. and the resistance $\frac{12 \times 20}{15,200} = \frac{240}{15,200} = 0.016$ thermal ohm.

The contact resistivity may be taken as 70 and the whole contact resistance will be:

$$\frac{70 \text{ ohms per square inch}}{24,000 \text{ sq. in. external surface.}}$$

$= 0.003$ ohm, giving a total resistance for the sides and bottom of 0.019 thermal ohm and a flow of heat equal to $\frac{1,500° - 30°}{0.019} = 77$ kw.

The total loss of heat by conduction and radiation from the furnace will therefore be $77 + 26 = 103$ kw.

The power used was 350 kw., so that the loss by conduction would be about 30 per cent. of the whole, allowing a possible efficiency of 70 per cent.

The temperature of the outside of the furnace roof will be

$$30° + (1,500° - 30°) \times \frac{.006}{.056} = 188° \text{ C.}$$

and the outside of the walls

$$30° + (1,500° - 30°) \times \frac{.003}{.019} = 262° \text{ C.}$$

In view of the uncertainty in regard to the constants and the other assumptions made in these calculations, we cannot count on great accuracy in the results; but they give some information and we may hope that before long we may have more accurate data and can make calculations sufficiently exact for our requirements.

Furnace with External Gas-heating.—The loss of heat from electric furnaces can sometimes be made less by heating the outside

of the walls by means of fuel. This would only be practicable when very cheap fuel-heat was available.

Fig. 33[1] represents a cross-section of a carborundum furnace having a number of holes in the lateral walls. The gases resulting from the reaction escape through these holes and burn, heating the outside of the walls. Screens, *E*, are placed outside the walls for the purpose of retaining the heat produced by the burning gas. Holes, *F*, in the bottom of the screens admit sufficient air for the combustion of the gas. The efficiency of external heating can only be small, and the method would often be very inconvenient. A similar principle is employed in the Harker tube furnace, Fig. 70.

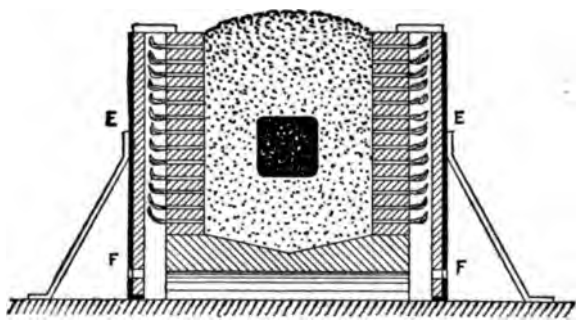

FIG. 33.—Furnace with external gas-heating.

Furnace Walls without Refractory Materials.—The properties of a number of refractory materials have been considered, but it not infrequently happens, in electric-furnace construction, that the heat can be developed in the midst of a large mass of the material to be heated; and although a very high temperature may be reached internally, the exterior never becomes strongly heated, and mere retaining walls, which need not be extremely refractory, can be used. The best known example of this is the Acheson furnace for the production of carborundum, Fig. 8. The Willson carbide furnace, Fig. 7, also depends for its preservation upon the unacted on, and relatively cool portions of the charge, as the walls of the crucible are only made of iron.

The same principle can be applied in the case of continuous electric smelting furnaces, by constructing the furnace in such a way that the heat is developed within the mass of ore descending in the shaft of the furnace, and by regulating the current so that

[1] W. A. Smith, U. S. patent 935, 937. Electrochem. and Met. Ind., vii, 1909, p. 494.

a portion of the ore will remain unfused around the sides of the furnace. When this can be done, no trouble will be experienced in maintaining the walls for an indefinite period, even when corrosive slags are produced; but this method does not lend itself readily to processes in which the charge must be heated considerably above its melting-point, as the hot central portion, being liquid, will mix with the cooler parts round the sides, and will eventually fuse the whole of the protecting layer of ore.

The device of restricting the zone of highest temperature to the middle of a furnace depends upon a constant abstraction of heat around the sides. This is usually the result of the air-cooling of the outer walls, but it would be more ideal if the cooling of the walls could be effected by a continual supply of fresh ore, so that the heat would not really be wasted, but would be used in heating the fresh ore. In some cases, however, it is even necessary to water-cool parts of furnaces in order to preserve the walls.

As an example of this may be mentioned the De Laval smelting furnace, Fig. 20. This has two troughs, *B* and *C*, which contain molten metal and serve as electrodes, and these are separated by a partition. The partition being entirely within the furnace will experience very little air-cooling, and the arrangement of the electrodes tends to make the current flow most strongly against it in passing through the slag. The partition will consequently become very hot at this point, and would certainly dissolve away, if it were not for the cooling effect of the water-jacket *J* placed within it.

As further examples of water-cooling, may be mentioned the water-cooled electrodes in Héroult's electric steel-furnace. The electrode is cooled, by a water-jacket, at the point where it passes through the furnace roof, and the part exposed to the air is therefore kept below a red heat, and does not oxidize as it otherwise would. With this arrangement, a closer joint is maintained around the electrode, the roof is protected from cutting by the flame issuing from the furnace, and less loss of heat occurs.

Another use of water-cooling is in electrolytic furnaces, when the molten electrolyte is contained in an iron vessel, which is required to be gas-tight. Since both the electrodes pass through the walls of the vessel, or the vessel itself may be one electrode, it is necessary to introduce an insulating joint at some point, and this joint must be unaffected by heat, by the electrolyte, or by the gases given off in the operation. A satisfactory method of effecting this is to

make the vessel in two parts, one of which may be the lid, and to maintain, by water-cooling, a layer of solidified electrolyte between the two parts, which are slightly separated. This method is employed in Borchers' appliances for the electrolysis of fused zinc chloride, and for the electrolysis of fused salts of lead.[1]

Electrode holders are sometimes water-cooled, to prevent them from becoming unduly heated, and occasionally even the electrodes themselves are water-cooled, as the metal tube electrode in Siemens' arc furnace, Fig. 3, or the water-cooled electrodes in nitric-acid furnaces, Figs. 139 and 140, or in Gin's steel furnace, Fig. 108.

RESISTORS[2]

The materials employed as resistors determine very largely the voltage of electric furnaces, and have been referred to under that heading; but it will be convenient to consider them particularly at this point.

Three cases present themselves: (1) Arc furnaces—in which the resistor consists of the intensely heated gases and vapors in the arc. (2) Furnaces in which the current passes through, and directly heats, the charge itself. (3) Furnaces having a special resisting conductor, in which the heat is developed.

(1) **The arc furnaces** need not be specially considered, as any gases or vapors that are ordinarily present in electric furnaces, will serve to carry the current.

(2) **Furnaces in which the Current Passes through the Charge.**—More furnaces belong to this class than to class (3); and it will obviously be more satisfactory, when possible, to pass the current through the material of the charge, instead of providing a special resistor for this purpose. The electrical conductivity of the charge will usually determine whether or not it can be used as a resistor. Of the ordinary materials found in nature, only the metals and carbon are sufficiently conductive to carry large electric currents; but, when heated to their melting temperature, most of the rock-forming minerals will carry an electric current; and when mixed in suitable proportions for a melting charge, and fused, they always form sufficiently good electrical conductors.

[1] Borchers' Electric Smelting and Refining (1897 Ed.). Figs. 157, 158, and 165.

[2] This convenient term for "a substance used because of its property of offering resistance to the passage of an electric current," was suggested by F. A. J. FitzGerald, Electrochemical Industry, vol. ii, p. 490, to avoid attaching two meanings to the word "resistance."

The conductivity of molten slags enables continuous smelting furnaces to be operated electrically, although the ore fed into the furnace may be non-conducting. The furnace may be started in the first place by means of an arc between the electrodes; the heat of the arc melting some of the surrounding material, which ultimately fills the space between the electrodes with a molten conducting slag. Heat is then generated by the passage of the current through the slag, more ore becomes heated and melted, and after a time the whole crucible of the furnace becomes thoroughly heated and filled with molten slag and metal. Another way of starting such a furnace is by placing some coke between the electrodes. The coke, being a moderately good conductor, soon becomes heated by the passage of the current, and melts the surrounding ore charge. The electrodes are then pulled further apart and the operation goes on as described above. A third method consists in pouring some molten slag into the furnace when the current may be at once switched on, and the furnace will soon be in regular operation.

Although the ordinary rocks and ore minerals are very poor electrical conductors, when cold, the coke, which is often added to the charge as a reducing reagent, is a fair conductor, and, if present in sufficient quantity, will render the charge somewhat conducting.

The writer has attempted to calculate the resistivity of the melting materials in the fusion zones of the Héroult and Keller ore smelting furnaces, and also of molten slags themselves. The data available were very unsatisfactory, and the results obtained can only be taken as representing in the roughest way the resistivities of these materials. The Héroult and Keller smelting-zones appear to have a resistivity of about 0.1 ohm for 1 cu. in., varying perhaps from about 0.05 to 0.15 ohm.[1] The resistivity of molten slag is about 1 or 2 ohms for 1 cu. in.[2] In the Gin and Kjellin steel furnaces, the resistivity of molten iron is an important factor; and this is very small, being about 0.000,07 ohm for 1 cu. in.[3]

[1] Calculated from the published drawings and electrical measurements for these furnaces, assuming that the resistivity is uniform throughout the volume between the bottom of the electrode and the surface of the melted charge.

[2] The resistivity of fused salts is of about this order, see J. W. Richards, Conduction in fused and solid electrolytes. Trans. Amer. Electrochem. Soc., vol. vii, p. 71.

[3] G. Gin (Haanel's European Report, 1904, p. 172), gives the resistivity of molten pig-iron as 216×10^{-6} ohms per centimeter cube (=0.000,085 ohm per inch cube). He has also measured the resistivity of molten pig-iron at 1,300° C. (Trans. Electrochem. Soc., vol. viii, p. 289), and finds it to be 16×10^{-6} ohms per cubic centimeter (=0.000,063 ohm per inch cube).

(3) **Furnaces having Special Resisting Cores.**—The cores or resistors in such furnaces are usually composed of carbon, which, in the form of coke-powder, for example, is of moderate conductivity. It therefore allows large currents to flow, and at the same time has a sufficient electrical resistivity to enable fairly high voltages to be employed—even when the cores are of considerable cross-section and moderate length. The resistivity of powdered carbon depends upon the fineness of grain, as well as upon the resistivity of the solid material from which the powder was produced. In order to obtain uniform heating, it is advisable to sort the powder, only using particles that are of a uniform size; under such conditions the resistivity increases with the fineness of the powder. The following resistivities for graphitized coke-powder have been calculated from experiments by FitzGerald.[1] The resistivity of ordinary coke-powder would probably be about four times as large.

TABLE VIII.—RESISTIVITY OF GRANULAR GRAPHITIZED COKE
(Ohms for 1 cu. in.)

Size of Grains	Cold	Red hot	Red hot and weighted
Between 5 and 6 meshes to the inch.....	0.36	0.24	0.15
Between 3 and 4 meshes to the inch.....	0.29	0.19	0.11

The first powder had been passed through a sieve having 5 meshes to the linear inch, and had been passed over a sieve of 6 meshes to the inch. The second powder had been passed through a 3-mesh sieve and over a 4-mesh sieve. The resistivities are given for the cold powder, and at a red heat. The third column shows the resistivity of the red-hot powder when a weight was laid upon it, thus making a better electrical contact between the adjacent grains. The powder was placed in an open trough, and was only 4 in. in depth; it would, therefore, be more lightly packed than in the core of a full-sized furnace. The figures in the last column would consequently more nearly represent regular furnace conditions. The figures are given for 1 cu. in., as inches are still more frequently used, in this country, than centimeters; to convert to centimeter resistivities, multiply by 2.54—the number of centimeters in 1 in.

Solid rods of carbon (amorphous or graphitized) are sometimes used as resistors, as in Borchers' resistance furnace, Fig. 16, or in Acheson's siloxicon furnace, Fig. 120. The resistivity of rods of carbon, such as are used for electric lighting and furnace electrodes,

[1] Francis A. J. FitzGerald. Electrochemical Industry, vol. ii (1904), p. 490.

and of the graphitized electrodes, is very much less than that of the same material in the form of powder. The following are approximate values:

TABLE IX.—RESISTIVITY OF SOLID CARBON[1]
(Ohms for 1 cu. in).

	Cold	Hot
Amorphous	0.00124–0.00163	about 0.0010
Graphitic	0.00032–0.00042	about 0.00025

In this table, "amorphous" refers to the ordinary carbon electrode, or arc-light carbon; while "graphitic" refers to the graphitized electrodes. The word "hot" refers to electric-furnace temperatures, such as 2,000° C., or 3,000° C., and it will be obvious that only approximate values can be given.

The smaller values under the heading "cold" were determined by Mr. P. M. Lincoln, of the Niagara Falls Power Co., on rods of about 1.6 sq. in. cross-section, and about 12 in. long. They are published by the Acheson Graphite Company in their pamphlet on Acheson Graphite Electrodes. The larger values are taken from a paper by Messrs. FitzGerald and Forssell[2] and represent a large number of experiments on electrodes of 4×4 in. section, and from 40 in. to 93 in. in length. The values under the heading "hot" do not represent actual experiments. Unfortunately the experiments of Messers. FitzGerald and Forssell were not continued to sufficiently high temperatures to give much information about the resistivity at electric-furnace temperatures, but as far as they go they indicate a more rapid decrease of resistivity with temperature in the graphite than in the amorphous carbon, as shown in Table X. The experiments were made at the works of the National Carbon Company.

TABLE X.—RESISTIVITY OF AMORPHOUS AND GRAPHITIC CARBON
Experiments by FitzGerald and Forssell

Temperature	Resistivity, ohms for 1-in. cube	
	Amorphous	Graphitic
10° C.	0.00163	0.000416
61° C.	0.00160	0.000387
109° C.	.....	0.000356
185° C.	.....	0.000338
282° C.	0.00158	.....
390° C.	0.00153	.....
466° C.	0.00150	.....

[1] Compare with the figures given in Table XI.

[2] FitzGerald and Forssell, Trans. Amer. Electrochem. Soc., vol. xi (1907), p. 317.

The results quoted are from an amorphous carbon electrode, 4×4 in. section and 73 in. long, and from an Acheson graphitized electrode 4×4 in. section and 40 in. long.

In large electric furnaces having a special resistor, some form of carbon is generally used for this purpose, but in smaller furnaces there are a number of other materials that may be employed, particularly when only a moderate temperature is required.

First there are certain metals and alloys which are used as wires to make heating coils in laboratory furnaces. Platinum, iron and nickel are the most commonly used metals, while nichrome (steel containing nickel and chromium), German silver and Monel metal (70 per cent. nickel 30 per cent. copper) are examples of alloys used for this purpose. Silicon, on account of its high melting-point and electrical resistivity, makes a suitable resistor, and rods of silundum (carbon converted into carborundum), are used for resistors in high-temperature furnaces. Carborundum itself is a non-conductor when cold, but the rods of silundum have a carbon core which carries the current, and after the rod has become heated, the carborundum becomes an electrical conductor and serves as a resistor. The "Nernst Earths" are refractory oxides which are non-conductors when cold, but conduct when red hot and are used for electric lamps, being heated in the first place by an auxiliary source of heat. These earths have been used as resistors in experimental electric furnaces.[1] Being very refractory they can be used for high-temperature furnaces whenever it is undesirable to use carbon.

In the following table are collected the resistivities of a number of substances that may be used as resistors, approximate values being given for the resistivity at furnace temperatures as well as when cold.

NOTES ON TABLE XI

F. Fulton, Principles of Metallurgy.
L. Landolt, Börnstein physikalisch-chemische, Tabellen, 1905.
H. Hering, Electrode Calculations. See Table XIII.
D.H. Driver-Harris Wire Co., "Resistance Materials."
G. G. Gin, Dr. Haanel, European Report.
F.G. FitzGerald. See Table VIII.
S. Stansfield, Tests made in the author's laboratory.
T. Tucker, Trans. Electrochem. Soc., xii, p. 171
( ) Figures in brackets are only approximate.
Calc. Calculated from the cold values, using a temperature coefficient.

[1] Harker tube furnace, Fig. 70.

TABLE XI.—ELECTRICAL RESISTIVITY (ohms)

Material	Reference	Cold		Hot		Temperature
		1-in. cube	1-cm. cube	1-in. cube	1-cm. cube	
Copper	F.	0.000,000,66	0.000,001,67	0.000,003	0.000,008	1,000° C. (calc.)
				0.000,006	0.000,015	100°–2,000° C. (H.)
Aluminium	F.	0.000,0011	0.000,0028	0.000,003	0.000,008	500° C. (calc.)
Nickel	F.	0.000,0027	0.000,0070	.....	.....	.....
Brass (60 per cent.)	L.	0.000,0029	0.000,0074	.....	.....	.....
Iron	F.	0.000,0038	0.000,010	0.000,063	0.000,16	Molten pig-iron (G.)
	H.	0.000,0058	0.000,015	0.000,05	0.000,13	100°–2,000° C. (H.)
Platinum	F.	0.000,0043	0.000,011	.....	.....	.....
Lead	F.	0.000,0076	0.000,019	0.000,049	0.000,124	860° C. (L).
German silver (18 per cent.)	D. H.	0.000,014	0.000,036	0.000,016	0.000,041	500° C. (calc.)
Nichrome	D. H.	0.000,039	0.000,100	0.000,057	0.000,144	1,000° C. (calc.)
Graphite	H.	0.000,34	0.000,86	0.000,31	0.000,69	100°–2,000° C. (H.)
Carbon (amorph.)	H.	0.0018	0.0046	0.0014	0.0036	100°–2,000° C. (H.)
Graphitized coke 1/4-in. grains	F. G.	0.3	0.7	0.2	0.5	Red hot
Carbon 1/6-in. grains	S.	(6)	(15)	1.1	2.8	1,000°–2,000° C.
Coke 1/2-in	S.	(2)	(5)	(1)	(2)	1000° C.
Coke 1/10-in	T.	(4)	(10)	(3)	(7)	500° C.
Silicate slag	S.	∞	∞	1–2	2–5	Molten
Fire-bricks (various)	S.	∞	∞	8–24	20–60	1,550° C.
				24–300	60–700	1,500° C.

THE ELECTRICAL RESISTIVITY OF FIRE-BRICKS AT HIGH TEMPERATURES[1]

Fire-bricks, and most refractory materials, are electrical insulators when cold, but, as is well known, at furnace temperatures they are partial conductors, and this affects their use in the construction of electrical furnaces. Hardly any data have been published, however, with regard to the electrical resistivity of these materials at high temperatures. This matter is of some importance with regard to the design of electric furnaces, because in many of these there is an opportunity for the electric current to flow in part through the heated walls of the furnace instead of merely through the resistor, or through the charge which is to be heated. Such leakage may not be harmful in some instances, but in others it may tend to overheat and melt the brickwork, and in any case it is desirable, when designing a furnace, to know the probable magnitude of this effect.

Another instance where a knowledge of the resistivity of furnace materials would be desirable is in designing a furnace like the Rodenhauser induction furnace, where the current is supplied to "pole pieces" and passes through a wall of refractory material before entering the steel in the furnace. In such a case it would be desirable to know the electrical resistance of the plate of refractory material separating the "pole piece" from the contents of the furnace.

The following experiments were made by Messrs. McLeod and McMahon as an undergraduate research in the Metallurgical Department of McGill University.

The materials tested were Caledonia fire-brick, Star silica-brick, magnesite-brick and chrome-brick, the last three being obtained from Messrs. Harbison-Walker. Cylinders 2 in. in diameter and about 2 1/2 in. long were cut from these bricks, the length of the cylinder being the thickness of the brick. These cylinders were supported, as shown in Fig. 34, between discs of graphite of the same diameter, and contact was made between the cylinders and the disc by means of a paste of graphite and glue. In the first few experiments the apparatus was heated in a gas furnace, but this method of heating was found unsatisfactory, and electrical heat was employed in the apparatus shown.

In the figure, *F* is the test-cylinder and *E E* are carbon electrodes supplying the testing current. Direct current was used at

[1] A. Stansfield, D. L. McLeod, J. W. McMahon, Trans. Am. Electrochem. Soc., xxii, 1912, p. 89.

110 volts, with a rheostat of lamps to avoid the danger of accident and to reduce the current flowing through the test-piece when the resistance became low. The current passing through *F* was read on an ammeter. To avoid any possible error through polarization, due to the use of a direct current, a reversing switch was used so that the current could be reversed in the test-piece before taking the reading. The testing current was supplied to the carbon electrodes *E E* by metal clamps, and the voltage was read on a voltmeter connected to the same clamps. The resistance measured includes the resistance of the carbon electrodes *E E*, which would be about 0.13 ohm, and would represent a correction of 0.4 ohm to be deducted from the resistivities stated in the table. These

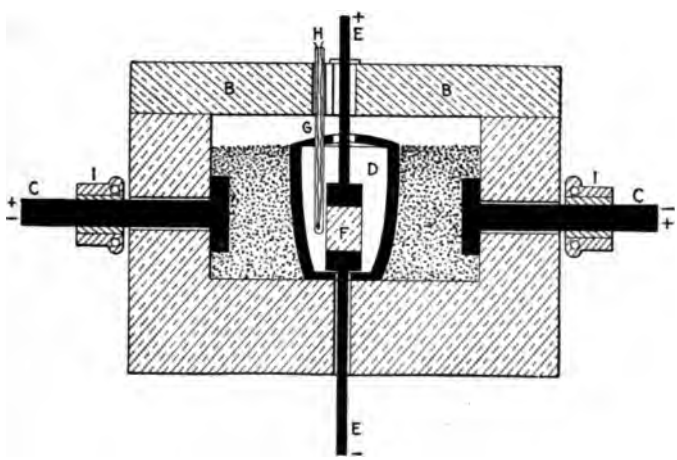

FIG. 34.—Furnace for testing electrical resistivity.

figures also include the contact resistances between the ends of the test-pieces and the carbon discs. These resistances were made as small as possible, and were probably a small fraction of the whole resistance. The method adopted is somewhat crude from an electrical point of view, but it was considered essential that the construction of the apparatus should be as simple as possible in view of the high temperature at which the tests had to be made. The test-piece was enclosed in a graphite crucible *D* in such a way that the testing current could not be short-circuited through the graphite crucible or through the heated portion of the furnace walls. A thermo-couple pyrometer *H*, in a silica tube, *G*, was used to indicate the temperature of the test-piece. The furnace was

filled around the crucible with broken graphite varying from 1/2 in. to 1/4 in. in size. Alternating current was supplied by means of water-cooled electrode holders *I* to the 1 1/2-in. electrodes *C C*, having blocks of graphite on their ends for distributing the current. From 300 to 600 amperes at about 30 volts were used for heating the furnace, and any temperature up to about 1700° C. could easily be obtained. The voltage of the test current was about 100 at

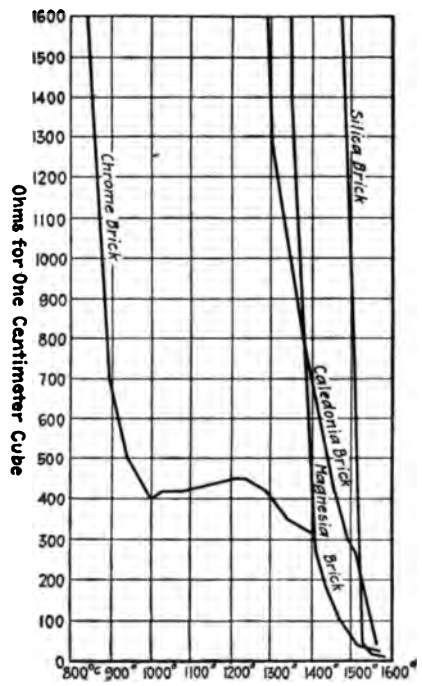

FIG. 35.—Electrical resistivity at high temperatures.

low temperatures, and dropped to 5 or 10 volts at the highest temperatures. The ammeter could be read to 0.01 ampere, and the largest current measured was about 1.2 amperes at about 5 volts.

The thermo-couple was of platinum, and platinum with 10 per cent. of rhodium. It was calibrated at the melting-point of copper, 1083° C., and the melting-point of the couple itself, which was taken as 1775° C.[1] The calibration curve was assumed to be a straight line between these points.

[1] The melting temperature of platinum is now considered to be 1755° C. and the temperatures given in Table XII may therefore be a little too high.

The results obtained from these experiments have been tabulated, and are also shown, in part, in Fig. 35. It will be seen from these that at 1500° C. the resistivity of all these materials is somewhat low. Comparing the results for the different materials, it will be noticed that the silica- and magnesia-bricks, which approximate most closely to pure oxides, retain their insulating qualities to high temperatures, no considerable current being obtained below about 1300° C. The fire-brick and chrome-brick, on the other hand, which are more complex in composition, begin to conduct at considerably lower temperatures. At the highest temperatures observed, about 1550° C., the resistivities of all the bricks tested were about the same, being about 25 ohms for a 1-cm. cube. The results obtained for the chrome-brick are very peculiar. and should be regarded as subject to correction.

TABLE XII.—ELECTRICAL RESISTIVITY OF FIRE-BRICK
(Ohms for 1-cm. cube)

Temperature	Caledonia fire-brick	Silica-brick	Magnesite-brick	Chrome-brick
600° C.	21,000	.....	.....	.....
700°	17,000	.....	.....	.....
800°	13,000	.....	.....	2,800
900°	9,000	.....	.....	760
1,000°	6,600	.....	.....	420
1,100°	4,400	.....	.....	430
1,200°	2,300	.....	.....	450
1,300°	1,300	9,700	6,200	410
1,400°	690	2,400	420	320
1,500°	280	710	55	.....
1,550°	60	22	30	.....
1,565°	.....	18	25	.....

ELECTRODES

The word electrode was originally applied to the terminal leading the electric current to or from an electrolyte, and an electrode was known as anode or cathode according as the electric current entered or left the electrolyte by means of it. In the great majority of electric furnaces no electrolytic action takes place, but the conductors, usually of carbon, by means of which the current is led from the terminals of the cables to the heated conducting material in the furnace, are known as electrodes.

Considered in this sense, the function of an electrode is to convey

the electric current from the electric cables, which are necessarily at a low temperature, to the heated resistor or arc in the furnace. An electrode must therefore be an electrical conductor which can be heated to a high temperature. An efficient electrode will be a good electrical conductor so as to use little electrical energy, and a poor conductor of heat so as to waste little heat by conduction from the furnace. An electrode should also be affected as little as possible by the heated contents of the furnace, and should not be of such a nature as to affect unfavorably the product to be obtained.

With scarcely any exception, electrodes are made of metal or of carbon; the great majority being of carbon. The fusibility of metals does not prevent their use as electrodes, as they can be contained in channels so as to retain their shape when melted. Metal electrodes can be used in furnaces containing a molten bath of the same metal, or in furnaces which are at a lower temperature than the melting-point of the metal. In most other cases carbon electrodes are used.

Carbon electrodes are made of some form of carbon mixed with tar and pitch, molded, and baked to drive off the volatile matter. Retort carbon and petroleum coke have been largely used and are still employed whenever the purity of the electrode is important, as in many electrolytic operations. In electric smelting, however, mechanical strength, electrical conductivity and cheapness are more essential than extreme purity, and anthracite is now generally used in the manufacture of large electrodes for this purpose.[1]

Electrodes made in this manner can be graphitized by heating them to a very high temperature in the Acheson graphite furnace, if they contain some carbide-forming substance to assist the conversion of the amorphous carbon into graphite. About 1.5 per cent. or 2 per cent. of hematite would serve for this purpose, while if coke or anthracite were used for making the electrodes, the impurities in these materials would enable the carbon of the electrode to be graphitized. The iron which is contained in the hematite, and the silica and alumina in the coke or anthracite, effect the conversion of the carbon into graphite and are finally expelled, by volatilization, at the extremely high temperature of the furnace; leaving the electrodes composed of compact graphite. Molten iron has the property of dissolving carbon, which separates from the iron as graphite on cooling; but it is difficult to understand how so small a proportion

[1] R. Turnbull, "Furnace Electrodes Practically Considered." Trans. Am. Electrochem. Soc., vol. xxi (1912), p. 397.

of iron, or other substance, can change the whole electrode into graphite.

Graphitized electrodes have the advantage of purity, good conductivity, and great resistance to oxidation. Their purity renders them very suitable for operations like the production of aluminium, in which the electrode-ash enters the electrolyte, and contaminates the resulting metal. The characteristic resistance of these electrodes to oxidation reduces their consumption, and their good conductivity has a similar effect, since smaller electrodes can be employed. Graphitized electrodes are largely used for electrolysis, but in electric smelting furnaces, cheaper ones made of coke, or anthracite, and tar have usually been employed; while in some cases the coke, forming part of the furnace charge, has been utilized for leading in the current; electrical contact being made through the charging hoppers.

Approximate figures, for the resistivity of carbon and graphite electrodes, have already been given. By means of these, it is easy to calculate the drop of voltage that would be produced in electrodes of a certain length and cross-section, by any particular current. The cross-section of an electrode is largely determined by the amount of current to be carried. The current-density, or the number of amperes per square inch of cross-section of the electrode, differs considerably in different types of furnaces and for different kinds of electrodes, being much higher in graphitized electrodes than in the ordinary variety. The large carbon electrodes used in the Héroult and Keller furnaces carry about 20 amperes per square inch, while small round carbon electrodes and large graphite electrodes carry more, up to about 100 amperes per square inch. Moissan used currents up to 200 or even 700 amperes per square inch, in small, ungraphitized electrodes, but this would be far too high for commercial work, as the carbons would become red hot and would rapidly waste away, and the consumption of electrical energy, in the electrode, would be too high to be tolerated. The loss by oxidation, of the exposed part of an electrode, can sometimes be prevented by a system of water jackets, as in the Héroult steel furnace, Fig. 93.[1]

In all furnaces in which electrodes are used there are certain

[1] F. M. Becket proposes to prevent the oxidation and destruction of carbon or graphite electrodes, by surrounding them with water-cooled jackets at the point where they enter the furnace. U. S. patent 855,441, see Electrochemical Industry, vol. v, p. 279.

losses of energy caused by the electrodes, and usually also losses of electrode material. These losses can be made a minimum by a careful attention to the material and dimensions of the electrodes. The nature of the surrounding bodies is of great importance in regard to the loss of electrode material; thus a carbon electrode wastes rapidly when immersed in a slag rich in iron oxide, or if exposed to air when red hot.

Dimensions of Electrodes.—In deciding on the dimensions of electrodes we have to consider the following points:

1. The essential length of the electrode, as determined for example by the thickness of the furnace wall.
2. The number of amperes of current to be carried.
3. The conductivity, for electricity and for heat, of the material of the electrode.
4. The temperature of the furnace.
5. The cross-section of the electrode. This can be determined from the other data.

It will be obvious that an electrode of small cross-section will cause large losses through its resistance to the passage of the electric current, and that one of large cross-section will cause large losses by conducting heat from the furnace to the electrode holders; this loss depending also on the temperature of the furnace. The effect of the cross-section on the loss of electrode material is not so obvious, as a stout electrode will have a larger area over which wasting by solution or volatilization can take place, but on the other hand its temperature will usually be lower and therefore the loss per square inch of surface will be less. Moreover, although the loss of weight may be greater with the stouter electrode the loss of length will certainly be less, and this may be of more importance in regard to economy of working than a small difference in the rate of loss of weight.

The most satisfactory course will be to determine the cross-section producing the least loss of energy, and then to modify this if necessary in view of economy of electrode material and convenience of operation.

Until recently it was generally supposed that the cross-section of an electrode should be simply related to the amount of current to be carried, giving a definite current-density for any particular electrode material, as is usual in calculating the size of copper wires or cables. It was noted however that large electrodes were made to have a much smaller current-density than small ones, but this was

attributed entirely to the smaller conductivity of the larger sizes of carbon electrodes.

Dr. Carl Hering published in 1909 a mathematical treatment of this problem, based on certain assumptions which are nearly correct in most cases, which shows that it is not the cross-section itself, but the ratio of cross-section to length, which should be proportionate to the amount of current flowing. Many other interesting relationships are established, as shown in the following "laws of electrode losses" which are quoted directly from Dr. Hering's paper.[1]

Laws of Electrode Losses

a. The combined loss through the cold end of an electrode is equivalent to the sum of the loss by heat conduction alone[2] (when there is no current) and half the C^2R loss.[3]

b. The combined loss will be least when the loss by heat conduction alone is made equal to half the C^2R loss; the total loss will then be equal to the C^2R loss and no heat will be conducted from the interior of the furnace.

c. This minimum loss is dependent only on the material, current, and temperature, but not on the absolute dimensions; it merely fixes the relation of the cross-section to the length, but leaves a choice of either; hence,

d. For economy of electrode material the length should be made as short as practical considerations permit.

e. For each material there is a definite minimum loss of electrode voltage which depends only on the temperature and is independent of the dimensions or the normal current for which the furnace is designed; hence,

j. The best possible electrode efficiency for any material may be determined from the total voltage of the furnace and this minimum voltage due to the material and the temperature, and is independent of the dimensions.

g. The temperatures indicated by the heat gradient of the combined flow are equal to the sums of those of the individual flows.

[1] Carl Hering, Trans. Am. Electrochem. Soc., vol. xvi, 1909, p. 265; Electrochem. and Metall. Industry, vol. vii, 1909, p. 442.

[2] The rate at which heat would flow along the electrode, from the furnace to the holder, if no electric current were supplied.

[3] "C^2R loss." The rate of heat production in the electrode due to the passage of the electric current.

These laws depend on the assumptions that the electrodes have a uniform cross-section throughout their length, that there is no transfer of heat between the electrodes and the furnace walls, and that the conductivities for heat and electricity are linear functions of the temperature.

The mathematical proof of these laws is given in the same paper. The calculation of electrode dimensions and electrode efficiencies can be readily made with the aid of the following formulæ given by Dr. Hering.[1]

Symbols Used in the Formulæ

S = Cross-section of electrode in square inches.
L = Length of electrode in inches.
C = Current in amperes.
W = Heat generated in the electrode, expressed in watts.
H = Flow of heat, in watts, due to heat-conductivity of electrode, if no electric current were flowing.
h = Flow of heat, in watts, from the furnace to the electrode.
X = Flow of heat, in watts, leaving cold end of electrode.
T = Difference of temperature, in Centigrade degrees, between the ends of the electrode.
r = Electrical resistivity of the electrode material in ohm, inch cube units.
k = Thermal conductivity of the electrode material, in watt, inch cube units.
E = Voltage between ends of electrode, or watts per ampere.
e = "Electrode voltage."
s = "Specific cross-section" in square inches.

In general:

$$X = H + \frac{W}{2} \tag{1}$$

$$h = H - \frac{W}{2} \tag{2}$$

$$\text{where} \quad H = kT\frac{S}{L} \tag{3}$$

$$\text{and} \quad W = C^2\left(r\frac{L}{S}\right) \tag{4}$$

[1] Dr. Carl Hering, Am. Inst. Elect. Engrs., vol. xxix, 1910, p. 285.

The loss of heat, X, will be a minimum when $H=\frac{W}{2}$. Call this minimum loss mX, then:

$$mX=2H=W=C\sqrt{2krT}=Ce\sqrt{T} \text{ (from 1, 2, 3 and 4)} \quad (5)$$

$$\frac{S}{L}=C\sqrt{\frac{r}{2kT}} \text{ (from 3 and 5)} \quad (6)$$

or

$$S=CL\sqrt{\frac{r}{2kT}} \quad (7)$$

$$e=\sqrt{2kr} \text{ (see 5)} \quad (8)$$

$$E=\sqrt{2krT}=e\sqrt{T} \quad (9)$$

$$mX=CE \quad (10)$$

$$s=\sqrt{\frac{r}{2k}} \quad (11)$$

The "specific section," s, is the cross-section of an electrode carrying 1 ampere, having a length of 1 in. and a difference of temperature of 1° C. between its ends. It depends simply on the conductivity for heat and electricity of the electrode material. The cross-section in any particular case can be obtained from this by the formula:

$$S=s\frac{CL}{\sqrt{T}}$$

The "electrode voltage," e, also depends simply on the conductivity for heat and electricity of the electrode material. It represents the voltage between the ends of an electrode, proportioned for minimum loss, and having a difference of temperature of 1° C. between its ends. The actual voltage between the ends of any suitably proportioned electrode is obtained by multiplying this "electrode voltage" by the square root of the temperature drop in Centigrade degrees.

In order to use these formulæ for the calculation of the dimensions of electrodes we must know the conductivities for heat and for electricity of the electrode materials, and that not only at the ordinary temperatures, but at all temperatures up to those of the electric furnace. Electrical conductivities are easily measured, and are known accurately for ordinary temperatures, but less exactly at high temperature. Heat conductivities are difficult to measure at any temperature. Dr. Hering[1] has shown, how to obtain with

[1] Carl Hering, A New Method of Measuring Mean Thermal and Electrical Conductivities of Furnace Electrodes. Trans. Am. Electrochem. Soc., vol. xvi, 1909, p. 317.

comparative ease values for the conductivities of electrodes, for both heat and electricity, which shall fairly represent the effective mean values between the hot and cold ends of the electrode. The test is made by providing an electrode A, B, Fig. 36, with a water-cooled terminal at each end, jacketing it as perfectly as possible throughout its length in refractory material and applying a pyrometer, P, at its middle point. A large electric current is passed through the electrode so as to heat it. The middle section of the electrode will attain the highest temperature and this will be indicated by the pyrometer which is placed there. When stable condi-

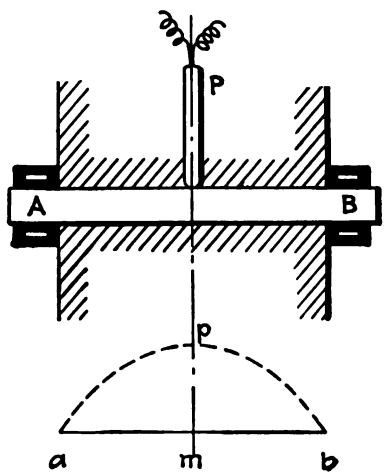

FIG. 36.—Electrode testing.

tions have been reached, the rod will represent two electrodes, *am*, and *mb*, having their lengths and cross-sections properly proportioned for that particular current and temperature; the latter, indicated by *pm*, represents the temperature of the furnace.[1] Each half of the rod represents a correctly proportioned electrode because no heat passes in or out through the hot end, that is through the middle section of the double electrode, and all the heat generated in the electrode finds its way out through the cold end; conditions which have been shown analytically to hold in the case of perfectly proportioned electrodes.

Having measured the different temperature drops between the

[1] Really the difference of temperature between the hot and cold ends of the electrodes.

hot and cold ends produced by different amounts of electric current, and having also the voltages across the terminals, we can calculate the correct mean values of the thermal conductivity, electrical conductivity, electrode voltage and specific section for each current or temperature drop from the foregoing formulæ. Using the same letters we may let the length $ab = 2L$, and the voltage between a and $b = 2E$. Then:

$$k = \frac{ECL,}{2TS} \qquad r = \frac{SE}{CL}$$

$$e = \frac{E}{\sqrt{T}} \qquad s = \frac{S\sqrt{T}}{CL}$$

The values so obtained for k and r represent the effective means of the thermal conductivity and the electrical resistivity between

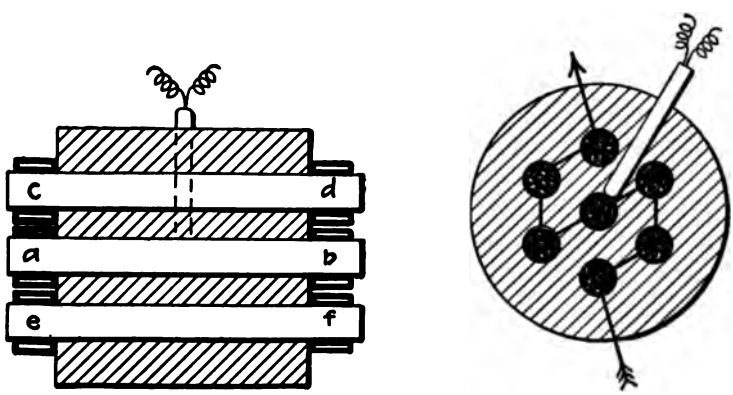

FIG. 37.—Electrode testing.

the hot and cold ends of the electrodes for the respective drops of temperature. For the design of electrodes we only need the values of e and s the electrode voltage and specific section.

As it is impossible to find a perfect heat insulator for jacketing the electrode in the above experiments, a number of similar rods of electrode material, *cd*, *ef*, etc., were placed around the test electrode, *ab*, as shown in Fig. 37. The same electric current was passed through each rod and in this way the loss of heat from the test rod was very small, as the surrounding rods were very nearly at the same temperature as the central test rod.

The electrodes used in these tests were of amorphous carbon, graphite, iron and copper; they were 8 in. long between the points

TABLE XIII.—PROPERTIES OF ELECTRODE MATERIALS

Electrode material	Furnace temperature	Drop in temperature T	Electrode voltage e	Specific section; square inches s	Electrical resistivity; ohms for 1-in. cube r	Thermal conductivity; watts per degree for 1-in. cube k
Carbon	20° C.	0° C.	.....	.....	0.00181	.....
Carbon	360° C.	260° C.	0.0560	0.0296	0.00166	0.95
Carbon	751° C.	651° C.	0.0630	0.0239	0.00150	1.32
Carbon	942° C.	842° C.	0.0639	0.0232	0.00148	1.38
Carbon	1,400° C.	1,300° C.	0.0650	0.022	0.00145	1.46
Carbon	2,000° C.	1,900° C.	0.0655	0.021	0.00140	1.54
Graphite	20° C.	0° C.	.....	.....	0.000337	.....
Graphite	390° C.	290° C.	0.0488	0.00677	0.000330	3.60
Graphite	546° C.	446° C.	0.0473	0.00685	0.000324	3.45
Graphite	720° C.	620° C.	0.0454	0.00695	0.000316	3.26
Graphite	914° C.	814° C.	0.0447	0.00722	0.000323	3.10
Graphite	1,400° C.	1,300° C.	0.042	0.0073	0.00031	2.95
Graphite	2,000° C.	1,900° C.	0.041	0.0075	0.00031	2.70

TABLE XIII.—PROPERTIES OF ELECTRODE MATERIALS.—*Continued*

Electrode material	Furnace temperature	Drop in temperature T	Electrode voltage e	Specific section; square inches s	Electrical resistivity; ohms for 1-in. cube r	Thermal conductivity; watts per degree for 1-in. cube k
Iron	20° C.	0° C.	.....	.....	0.000,0058	.....
Iron	398° C.	298° C.	0.0083	0.00178	0.000,0148	2.34
Iron	727° C.	627° C.	0.0109	0.00254	0.000,0278	2.15
Iron	912° C.	812° C.	0.0112	0.00287	0.000,0323	1.96
Iron	1,245° C.	1,145° C.	0.0127	0.00313	0.000,0399	2.04
Iron	1,400° C.	1,300° C.	0.0128	0.0033	0.000,043	1.92
Iron	2,000° C.	1,900° C.	0.014	0.0037	0.000,052	1.90
Copper	20° C.	0° C.	.....	.....	0.000,00066	.....
Copper	197° C.	97° C.	0.0047	0.00021	0.000,00100	11.12
Copper	268° C.	168° C.	0.0049	0.00024	0.000,00117	10.32
Copper	370° C.	270° C.	0.0053	0.00027	0.000,00143	9.92
Copper	541° C.	441° C.	0.0060	0.00031	0.000,00185	9.61
Copper	837° C.	737° C.	0.0070	0.00038	0.000,00266	9.14
Copper	1,400° C.	1,300° C.	0.0086	0.00050	0.000,0043	8.7
Copper	2,000° C.	1,900° C.	0.0099	0.00060	0.000,0059	8.3

a and *m*, and 5/8 in. in diameter. The cool end of each electrode, at the point where it enters the holder, was kept at 100° C.

The results of these tests[1] are reproduced, in a condensed form, in Table XIII. The electrode voltages and other properties are the mean values for the range of temperature from 100° C. to the "furnace temperature" given in the first column of figures. The figures in bold face do not represent actual observations but are obtained by exterpolation, and while most of these can be depended on as being approximately correct, less confidence can be placed in those that represent the properties of molten iron and copper. The electrical resistivity at 20° is included for the purpose of comparison.

Examples.—As an example of the use of this table it will be of interest to determine the correct dimensions of electrodes of carbon, graphite, iron and copper for a furnace which is kept at 1,400° C., the cool end of the electrode being at 100° C., the length of electrode 20 in. and the current 10,000 amperes. The copper electrode would of course be molten at its hot end.

The cross-section is given by the formula:

$$S = s\frac{CL}{\sqrt{T}}$$

$$S = s\frac{10{,}000 \times 20}{\sqrt{1300}} = \frac{200{,}000\ s}{36.1}$$

For carbon, $S = \frac{200{,}000 \times 0.022}{36.1} = 122$ sq. in. and $D = 12.5$ in.[2]

For graphite, $S = \frac{200{,}000 \times .0073}{36.1} = 40.5$ sq. in. and $D = 7.1$ in.

For iron, $S = \frac{200{,}000 \times 0.0033}{36.1} = 18.3$ sq. in. and $D = 4.8$ in.

For copper, $S = \frac{200{,}000 \times 0.0005}{36.1} = 2.8$ sq. in. and $D = 1.9$ in.

The drop of voltage in the electrode is given by the formula:

$$E = e\sqrt{T} = e\sqrt{1300} = 36.1\ e$$

For carbon, $E = 36.1 \times 0.065 = 2.34$ volts.
and the loss of power is 23.4 kw.

For graphite, $E = 36.1 \times 0.042 = 1.51$ volts.
and the loss of power is 15.1 kw.

[1] Carl Hering, "The Proportioning of Electrodes for Furnaces," Proc. Am. Inst. Elect. Eng., vol. xxix, 1910, p. 285.

[2] *D* is the diameter of the electrode.

For iron, $E = 36.1 \times 0.0128 = 0.46$ volts.
and the loss of power is 4.6 kw.
For copper, $E = 36.1 \times 0.0086 = 0.31$ volts.
and the loss of power is 3.1 kw.

The results of these calculations are shown graphically in Fig. 38.[1] The electrodes of each material are drawn to scale and the black line below each indicates the relative loss of power caused by that electrode.

The total loss of power is that caused by all the electrodes, and

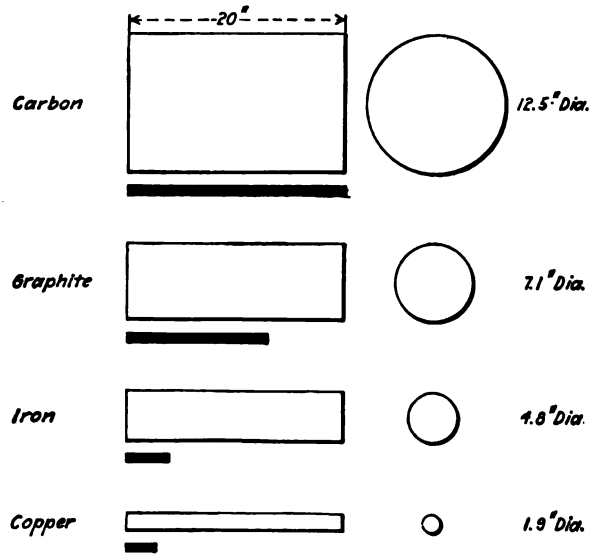

FIG. 38.—Equivalent electrodes.

the "electrode efficiency" depends on the number of electrodes and the voltage of the furnace. Thus for a Héroult steel furnace, with two carbon electrodes, operating at 100 volts, the total electrode loss would be $2 \times 23.4 = 46.8$ kw., and the electrode efficiency would be $\frac{100 - 2 \times 2.34}{100} = 95.32$ per cent.[2]

[1] This figure and the preceding calculation have been made by the author. They differ slightly from a calculation and illustration given by Dr. Hering in the paper quoted.

[2] The Héroult and the Girod steel furnaces would be hotter than the 1400° C. assumed in the above calculation, and the electrode losses would therefore be somewhat higher, though their relative values would be unchanged.

The Hering method of calculation does not apply directly in the case of arc

In the case of a Girod furnace having one carbon electrode and one iron electrode, or a number of iron electrodes of the same total cross-section, the loss of power would be 23.4 kw. in the carbon electrode and 4.6 kw. in the iron electrodes, or a total loss of 28.0 kw. If the furnace were operated at 60 volts, there being only one arc in this case, the electrode efficiency would be $\frac{60-2.34-0.46}{60}$ $=95.33$ per cent., which is practically identical with the Héroult furnace. In comparing the Héroult and the Girod furnace it will be noticed that the higher voltage of the Héroult furnace, which is caused by having two arcs in series, tends to give a higher electrode efficiency than in the Girod furnace, which has only one arc in series and therefore a lower voltage. One of the electrodes in the Girod furnace is of iron, and the higher efficiency of the iron electrode quite makes up for the loss in efficiency due to the lower voltage.

Comparing the dimensions of electrodes used in large electric furnaces with the dimensions indicated by Dr. Hering's table it will be found in general that electrodes are made somewhat stouter than the theory demands. This will cause a greater loss of heat by conduction, but the electrode will last longer and this will no doubt more than offset the greater loss of heat.

ELECTRODE HOLDERS

These are employed for making electrical connection between the electrode and the cable which supplies the electric current. They are also used for supporting and manipulating movable electrodes. The holders are made of copper or bronze, which are preferable on account of their good electrical conductivity, or of iron or steel, which are cheaper and do not melt so easily if over-heated. It is not easy to maintain a thoroughly good electrical contact between the holder and the carbon electrode, because the electrodes and their holders become heated, and the expansion of the metal loosens its hold on the carbon. The relatively poor conductivity of carbon makes a large area of contact desirable, while its small me-

furnaces, as heat escapes laterally from the electrodes both within and without the furnaces. The part of the electrode within the furnace can be neglected (being considered as a resistor) but the air-cooled or water-cooled part outside the furnace will introduce complications. If, however, the electrode is measured from the holder to the inside of the furnace wall, the formulæ can be used without serious error.

chanical strength renders it difficult to clamp the holder sufficiently tightly without breaking the electrode. In addition to this, the heat of the furnace tends to render unworkable any bolts and nuts or similar mechanical devices.

Graphitized electrodes can be easily machined or threaded, and attached in this way to the holder; but for electric smelting furnaces, electrodes of rectangular cross-section are often employed, and these are secured in their holders by bolting or clamping. The electrodes in smelting furnaces are usually vertical, in order to be more easily manipulated, and are suspended by a chain, so as to be

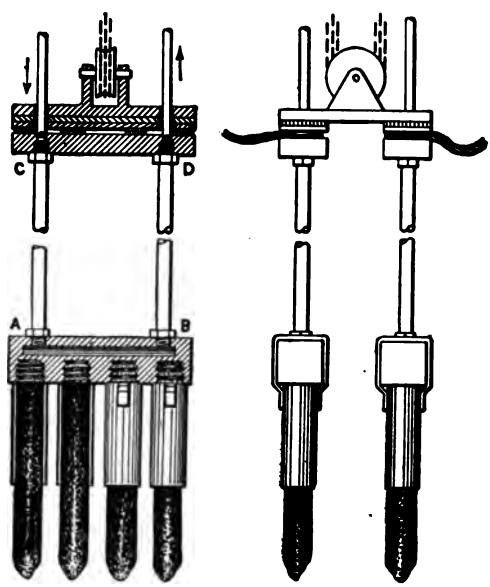

FIG. 39.—Water-cooled holder for round electrodes.

easily raised or lowered; the electric cable being attached directly to the electrode holder.

Electrode holders may be divided into *terminal holders*, which hold the electrode by the end, and *lateral holders*, which hold the electrode at any point along its length. Their construction depends also upon whether they are intended for round or square electrodes, and whether they are movable, or are attached to the wall of the furnace. In many cases they are water-cooled and sometimes a lateral holder serves as a gland to make a gas-tight joint between the electrode and the wall or roof of the furnace.

Terminal holders are attached to the end of an electrode and are usually movable, serving to advance the electrode as it wears away. The typical holder of this class is used in pit furnaces for the production of calcium carbide, ferro-silicon, etc. The holder is supported by a chain, and lowered as far as practicable, as the electrode burns away. The holder is usually water-cooled and is clamped to the electrode with the aid of bolts or wedges, or the elec-

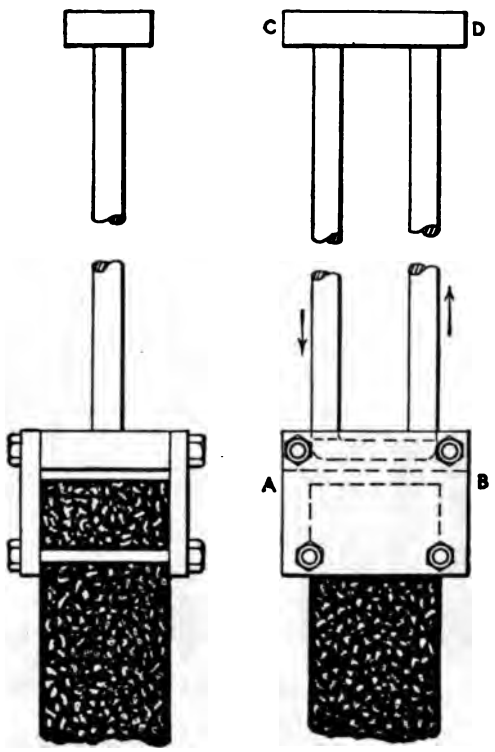

FIG. 40.—Water-cooled holder for square electrodes.

trode end may be threaded, and screwed into a socket in the holder. The holder is usually of a considerable length so that when the lower end is in the furnace the upper end, to which the cables are attached, will be sufficiently removed from the heat of the furnace. For use with an inclined or horizontal electrode the holder is provided with guides to support and direct the electrode. The electric current enters the electrode through the holder and passes along the

whole length of the electrode before entering the charge; thus causing a waste of electrical energy.

Fig. 39 shows a water-cooled electrode holder such as is used in some calcium carbide furnaces. *A B* is an iron casting with threaded sockets into which the round electrodes are screwed. The block *A B* is supported from another cross-piece *C D* by the pipes *C A* and *D B* which convey both the cooling water and the electric

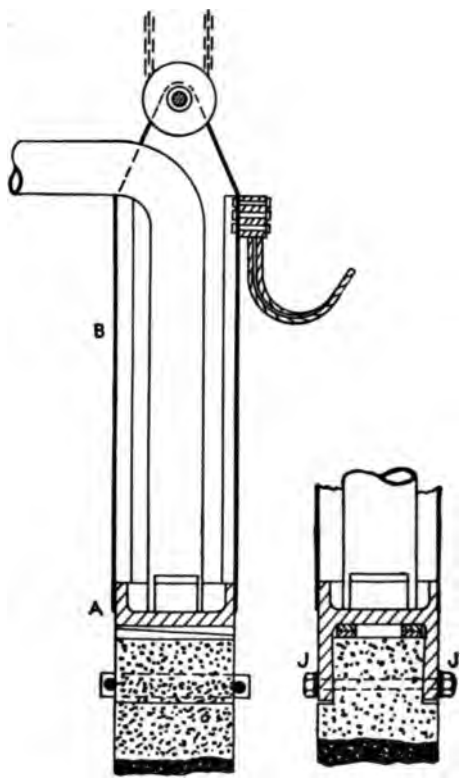

FIG. 41.—Air-cooled holder for square electrodes.

current. The holder is supported by a pulley and chain, which are insulated from the holder, and electrical connection is made by flexible uncovered cables as shown. In the carbide furnace, two such electrode holders are used as shown in the end view and in Fig. 121, the current entering by one, passing through the molten carbide in the furnace, and out by the other. The two holders are supported by the same pulley, so that one regulating apparatus

serves for both. A similar holder for use with laboratory furnaces is shown in Fig. 75.

Fig. 40 shows a holder designed for use with a rectangular electrode. The electrode is grooved on both sides to allow the passage of the bolts and this prevents any possibility of its slipping from the holder. The contact plates must be arranged so that they can be tightened on to the electrode. This part of the holder, *A B*, is connected to the upper part, *C D*, by pipes carrying cooling-water. The supporting pulley and the electric cables, which are not shown in

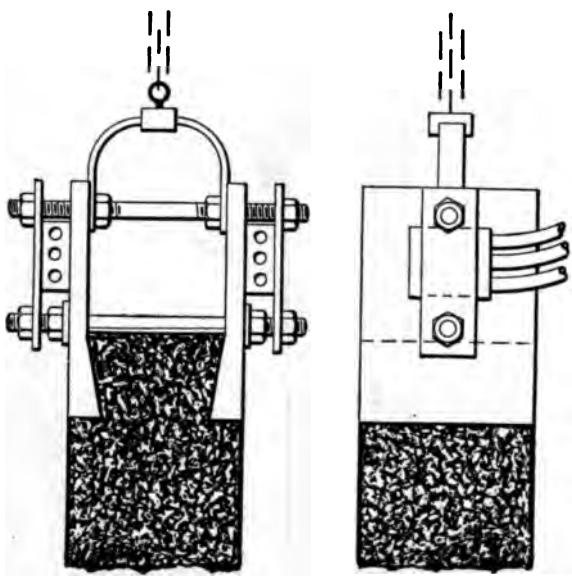

FIG. 42.—Air-cooled holder for square electrodes.

the figure, are attached to *C D*, and are thus removed from the heat of the furnace.

Fig. 41 shows the holder used in the Héroult iron-smelting furnace at Sault Ste. Marie.[1] This consists of an iron head, *A*, having wedge-shaped jaws, *J*, *J*, which are prevented from spreading by two bolts. The electrode is recessed to fit the jaws and is driven downward by wedges, thus making good contact with the jaws. The upper part, *B*, is made of sheet copper, and enables the electric cable, and the pulley and chain by which the electrode is suspended, to be placed so far above the furnace, that they will not be over-

[1] Dr. Haanel, Report on Experiments at Sault Ste. Marie, 1907, Plate VII.

heated, while the lower part, *A*, can be cooled by air or water introduced from above.

Fig. 42 shows a holder used in some French carbide furnaces.[1] It resembles the last-mentioned holder but has no provision for water-cooling, and the cables are attached immediately above the electrode. The holder and cables would be likely to suffer from over-heating.

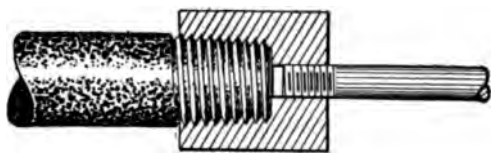

FIG. 43.—Simple threaded holder.

The holders used in the Domnarfvet iron smelting furnace, Fig. 90, are similar to this, but guides are needed in that case to support and direct the electrodes which are inclined at about 60° to the horizontal.

A simple holder for round electrodes with threaded ends is shown in Fig. 43. The thread in the socket may be slightly tapered so as

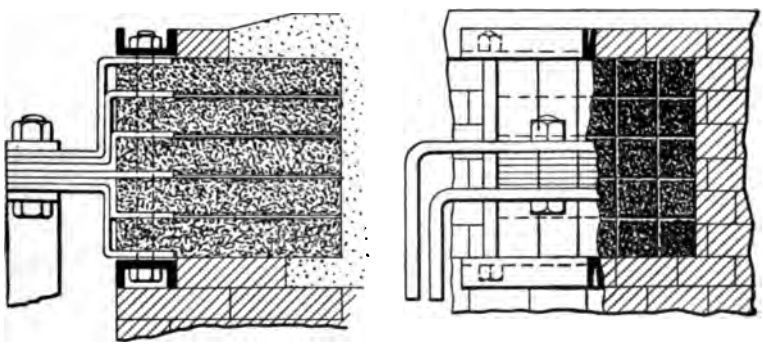

FIG. 44.—Electrode holder for carborundum furnace.

to ensure a good contact. As additional security one or more set screws may enter through the side of the holder. Cooling water could be introduced, if desired, through the supporting rod.

A holder of this type is used in the Stassano steel furnace, Fig. 109. In this case the part of the electrode outside the furnace is protected from oxidation by the surrounding water-jacket, which also serves

[1] W. Borchers, Electric Furnaces, p. 191.

to prevent over-heating of the holder. The rod of the holder passes through a stuffing-box to render the furnace gas-tight.

The holders used in the Acheson carborundum and graphite furnaces, Figs. 8 and 44, are terminal holders, but in this case the electrodes do not wear but remain of a constant length, and the holders are stationary. The electrodes in these furnaces are built up of a number of graphite rods of rectangular section. A number of copper strips are laid between these rods and the whole is clamped together. Electrical contact is made to the ends of the copper strips.

Lateral electrode holders hold the electrode at any point along its length, and the electrode can be advanced through the holder as it becomes shorter. With those holders the electric current does

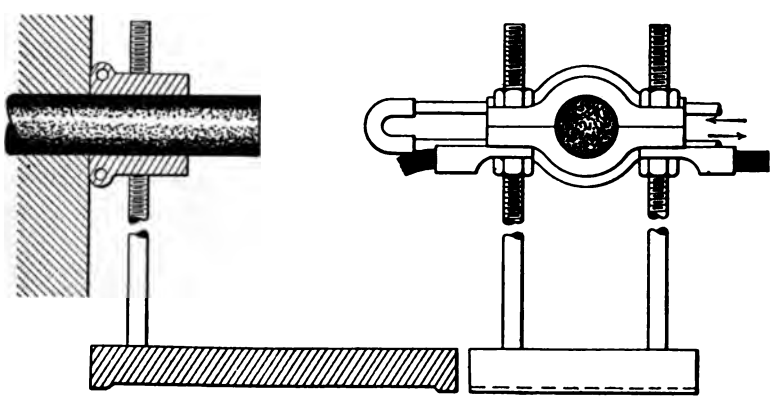

FIG. 45.—Water-cooled lateral electrode holder.

not travel so far through the electrode, thus avoiding waste of power, but on the other hand means must be provided for feeding the electrode through the holder. It may be worth while to mention that the waste of power with terminal electrode holders is caused mostly by the *change* in the effective length of the electrode as it wears away. If the electrode is correctly proportioned when new, it will become too short, in proportion to its cross-section, as it wears away; while if correctly proportioned for its final length, it will be too long, in proportion to its cross-section, when new.

The lateral electrode-holder in its simplest form consists of a clamp encircling the electrode and making electrical contact with it. Such a holder, designed for round electrodes, is shown in Fig. 45, and consists of two half-round brass castings which are clamped

together around the electrode by nuts on the threaded rods that support them. The nuts also serve to hold the lugs of the cables and to adjust the height of the holder. There is a hollow beading, in both halves of the holder, through which cooling water is circulated. Any adjustment of the electrode is made by loosening the nuts and moving the electrode through the holder. This holder was designed by the author for use in the laboratory with electrodes of 2-in. or 3-in. diameter; a liner being used with the smaller sizes.

A similar holder without water-cooling, Fig. 46, is intended for use with small round electrodes in the Moissan furnace, and serves in this case to feed the electrode into the furnace. The holder is, however, essentially lateral, as it can be kept near to the wall of the furnace; the clamps being loosened and the holder withdrawn at

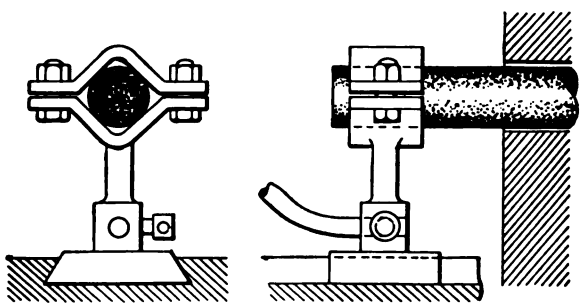

FIG. 46.—Uncooled lateral electrode holder.

intervals when the electrode has become too short. The holder is so shaped as to hold round electrodes of different diameters.

The holder of the Héroult steel furnace, Fig. 47, may be classed as a lateral holder, as the electrode can be fed through the holder; though the electrode could not conveniently be advanced through the holder when in use.

The electrodes of the Héroult steel furnace[1] are supported by arms from the back of the furnace, instead of by chains; this construction being better adapted to a tilting furnace. The electrode is square in section, and is surrounded by four contact pieces, one for each side. One of these pieces is attached to the arm and the other three are tightened against the electrode by a steel strap, which encircles them, and is drawn tight by a screw contained within the arm.

[1] Dr. Haanel, European Report, 1904, Figs. 3–7.

The holder is shown in outline in Fig. 47. *AA* is the arm with tightening screw, *S* and nut *N*, to which is attached the strap

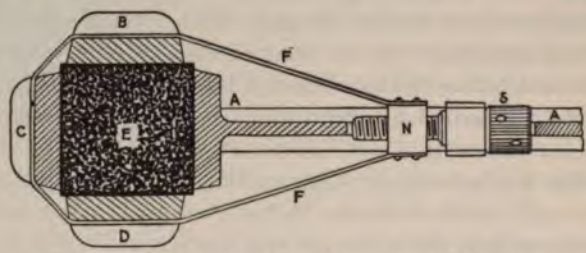

FIG. 47.—Electrode-holder of Héroult steel furnace.

F, which draws the contact pieces *B*, *C* and *D* against the electrode *E*, and the latter against the arm *A*. A cable, not shown in the sketch, is bolted to *A*, *B*, *C*, and *D*, thus distributing the current

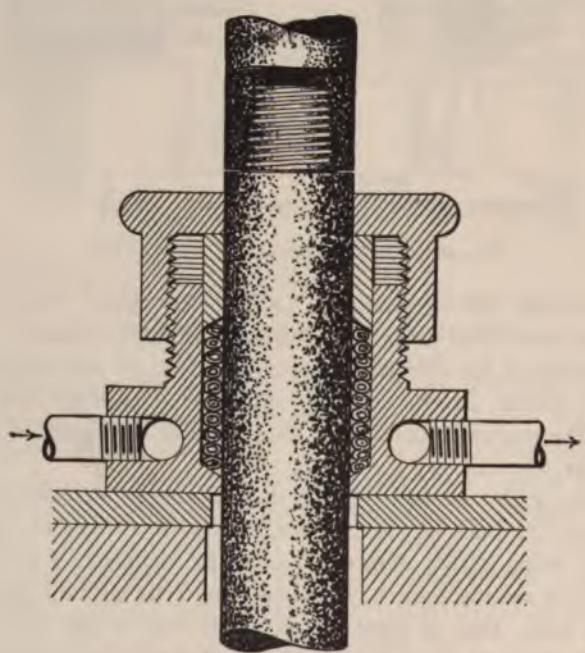

FIG. 48.—Stuffing-box electrode holder.

to the contact pieces. A shield is provided to protect the holder from the heat and smoke of the furnace.

The author has developed, for use in laboratory furnaces, a very convenient type of holder which is attached to the wall or roof of the furnace and serves as a stuffing-box to render the furnace gas-tight; preventing any escape of gases around the electrode. This is shown in Fig. 48, and consists of a water-cooled brass stuffing-box which can be bolted to the metal casing of the furnace; suitable insulation being used to prevent electrical contact. Metallic packing is used, consisting of a flexible braid of fine copper wire; and when reasonable care is taken, this will carry very large currents without becoming over-heated. Electrical connection is made to the holder by the thick-walled copper pipes which convey the cooling water.

A similar holder, intended for a large furnace, has been described by Dr. Haanel, see Fig. 81, in which blocks of graphite are used for the conducting packing in the stuffing-box.

Round electrodes are now used in the Héroult steel furnace, see Fig. 94. A suitable holder consists of a water-cooled copper collar, divided at one point, and cut partly through at several points so that it can be tightened or loosened by two lugs and a right and left handed screw.

The collar is supported by a steel arm which can be raised or lowered to adjust the electrode in the furnace. The collar does not, however, make electrical contact with the arm, but is hung from it by a number of insulated bolts; electrical connection being made by flexible cables to the copper collar and not to the supporting arm.

When the electrode has become too short, a fresh length can be screwed on above the old one, and by adjusting the screw the lengthened electrode can be allowed to slide down through the collar.[1]

[1] The writer is indebted for particulars of this holder to Mr. W. R. Walker of the U. S. Steel Corporation.

CHAPTER V

THE OPERATION OF ELECTRIC FURNACES

ELECTRICAL SUPPLY

Alternating Current.—For operating electric furnaces alternating current is usually employed, on account of the greater ease with which it can be produced, and because it can be changed into current at higher and lower voltages by means of a static transformer —that is, without the need of some rotating machinery such as would be needed for changing the voltage of direct current.

In general, electric power for smelting or other purposes is generated at some point where water-power is available. The power is conveyed by an alternating electric current of high voltage, to the point at which the electric smelting is to be done. At this point it is changed by means of a static transformer into a much larger current, at the low voltage which is suitable for electric smelting. In order to regulate the voltage of the current flowing to the furnace the secondary winding of the transformer is often divided into two parts, and by coupling these in series or parallel, the current can be obtained at either of two voltages, one of which is twice the other. Smaller variations in the voltage of the secondary current are obtained by means of taps on the primary winding, which render it possible to alter the number of effective turns of the primary winding. By cutting out one section after another, of this winding, the ratio between the turns in the primary and secondary is decreased, and therefore the voltage in the secondary is correspondingly raised.

An example of such a transformer, with regulation of voltage, is shown in Fig. 49, which is a diagrammatic view of one of the 1,600-kw. transformers in the Carborundum Works at Niagara Falls.[1] The transformer is supplied with primary current at 2,200 volts, while the secondary current, which passes through the furnace, can have any voltage between 40 and 200. In the diagram, the secondary windings *SS* are divided into halves, and these by means of a switch *W* can be coupled in series or parallel. The primary winding *PP*

[1] E. F. Gehrkens, "Voltage Control of Transformers for Electrical Furnaces." Met. and Chem. Engng., viii, 1910, p. 373.

has 13 taps on it, marked 1 to 13. One cable, 14, from the supply *L*, passes to one end of the winding, while the other cable makes contact at any one of the 13 taps. In changing the connection from one tap to the next, it is necessary to make contact with the second tap before breaking contact with the first. On the other hand, it would not do to make direct contact with two taps at the same time, as this would short-circuit a section of the winding. These difficulties are avoided by means of a compensating device, shown diagrammatically at *AB*, which can be connected in turn, to any two adjacent taps. The high-tension terminal makes contact through a number of fingers *T*, to points on the resistance wire *AB*. Supposing, then, that *T* is opposite *A*, contact is being made directly to tap 6. By

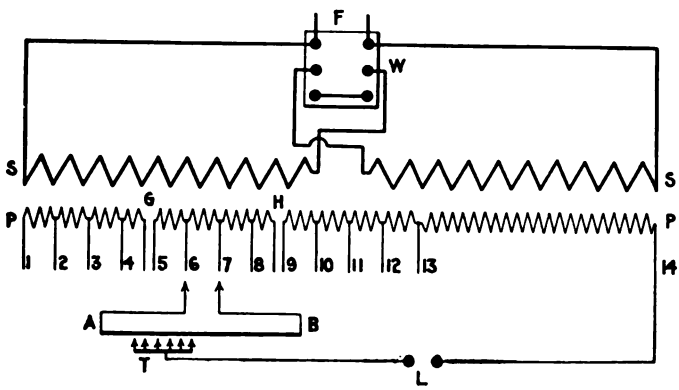

FIG. 49.—Transformer with voltage regulation.

moving T gradually from A to *B*, the connection is changed from tap 6 to 7 without any sudden make or break. In order to change the connection from 7 to 8, the apparatus *AB* is reversed, so that the contact which was on 6 comes to 8, and then, by moving *T* gradually back from *B* to *A*, the contact is transferred from 7 to 8.

In order to avoid the production of dangerously high voltages in the unused portions of the primary winding, switches are placed in this, at the points *G* and *H*, which can be opened when the coils to the left of them are out of use. When the secondary windings are coupled in parallel and the whole of the primary winding is in use, the voltage supplied to the furnace will be 40, and under these conditions a current of 40,000 amperes can be supplied to the furnace. By moving the contact piece gradually from 1 to 13, the voltage at the furnace will rise from 40 to 100. Coupling the

secondary coils in series would double this voltage, and therefore in order to raise the voltage gradually it is necessary, at the same time, to change the contact in the primary winding back to some point, which shall give 100 volts at the furnace. By again advancing the contact up to tap 13, the voltage at the furnace will have risen to 200; under which conditions the furnace will only draw 8,000 amperes. The apparatus, described here in outline, is constructed so as to work almost automatically by means of an electric motor.

Direct Current.—In electric-furnace operation direct current is only employed when it is needed for electrolysis. It is obtained by means of a direct-current generator driven by a prime mover or by an electric motor operated by the alternating-current supply. The alternating-current motor and direct-current generator may be replaced by a motor-generator which is supplied with alternating current and delivers direct current. In consequence of the very low voltage of most electrolytic furnaces, a number of these are usually connected in series, thus avoiding the need of a very low-voltage generator.

Polyphase Currents.—Electric power, in large quantities, is usually produced in the form of three-phase current and it is there-

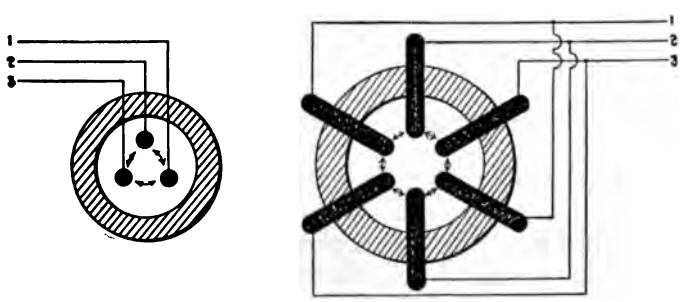

FIG. 50.—Three-phase furnaces.

fore desirable to employ this instead of single-phase current in electric smelting. In some furnaces three-phase current can be used to advantage, and is preferable to single-phase current. Such furnaces are provided with three or six electrodes, connected to the three-phase supply as shown in Fig. 50. Other furnaces can only be operated by single-phase current, and in such cases three furnaces should be grouped as one unit, each using one phase of the three-phase supply.

In the latter case there are two ways in which the furnaces may be connected. In one of these—the delta connection—see Fig. 51, each furnace, *F*, is connected between two of the cables 1, 2, 3; each cable being connected to one electrode of two furnaces. The other connection—the *Y*—is shown in Fig. 52. Here one terminal of each furnace is connected to one cable and the other terminal of

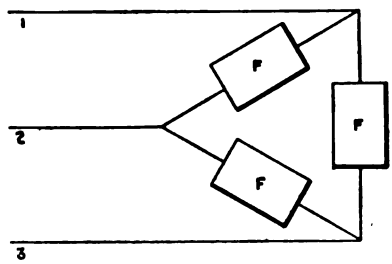

FIG. 51.—Delta connection of furnaces.

each furnace is connected to a common point. In this connection the voltage supplied to each furnace is only 58 per cent. of the voltage obtained by the first connection, but the current is proportionally larger, producing an equal amount of power. The arrangement of the furnaces in Figs. 51 and 52 is made so as to show the current connections more clearly, the direction of each furnace showing, in angular measure, the relative phase displacement of the

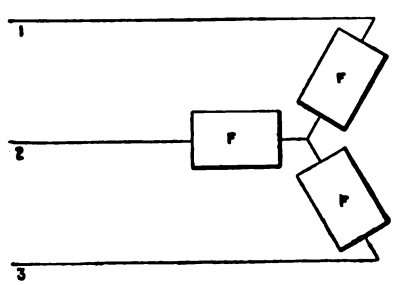

FIG. 52.—Y connection of furnaces.

voltage supplied to it. The furnaces would not actually be arranged in this manner. In these figures the furnaces have been shown as connected directly to the conductors bringing the current, but it is usually necessary to employ transformers to lower the voltage. One transformer may be used for each furnace, or the three transformers may be combined to form a three-phase transformer taking

in three-phase current at a high voltage and giving out low-voltage three-phase current which can be supplied to the furnaces as shown in the figures.

Three-phase current has been used in the Héroult steel furnace, Fig. 94, using three electrodes, and in the Domnarfvet iron smelting furnace, Fig. 90, using three or six electrodes. In the Grönwall steel furnace, Fig. 100, an electrode is provided in the bottom of the furnace in order to produce more heat in the molten steel. If three movable electrodes were used and the bottom electrode were made the neutral point, the current would circulate between the movable electrodes and hardly any would pass down to the bottom electrode, but by using only two movable electrodes the current can be made to flow through the bottom electrode. For this purpose three-phase current should not be used because, as the

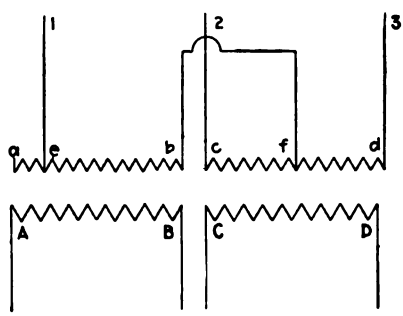

FIG. 53.—Scott connection of transformers.

resistance between the two movable electrodes is decidedly greater than between either of these and the bottom electrode, the phases would be unbalanced. Two-phase current is therefore employed; the bottom electrode serving as a common return. Two-phase current has also been used in the iron smelting furnace at Trollhättan, using four movable electrodes.

Three-phase current is more usually available than two-phase, and when it is desired to convert three-phase to two-phase current—or the reverse—the conversion can easily be effected, at the same time as the necessary change from high-tension to low-tension, by means of transformers arranged with the Scott connection. This is shown in Fig. 53, in which high-tension three-phase current is being changed into low-tension two-phase current for use in the furnace. In the figure *ab*, *cd* are the high-tension windings and *AB*, *CD* the

low-tension windings of two equal transformers giving the desired voltage ratio between the three-phase supply, 1, 2, 3, and the two-phase current to be produced. The transformer *cd* has a tap, *f*, at the middle of the high-tension windings, and the transformer *ab* has a tap, *e*, so that *eb* is 87 per cent. of *ab*. When the connections are made as indicated, the low-tension currents obtained from the windings *AB* and *CD* will be of equal voltage and will have a phase difference of one-quarter period; that is they will constitute a two-phase current. As the section *ae* of the high-tension winding is not used in this arrangement, it can be omitted, but it is sometimes convenient to use a standard transformer with an 87 per cent. tap, as shown in the figure.

Electric Power.—In the case of a direct current or an alternating current supplying a non-inductive furnace, the product of the amperes flowing through the furnace and the voltage measured between its terminals gives the power in watts, that is the rate at which energy is being supplied to the furnace. Most furnaces are somewhat inductive, partly on account of the iron used in their construction, and when these are operated by an alternating current the inductance of the furnace causes the current to lag behind the applied voltage. Under these conditions the volt-amperes, that is, the product of the volts and the amperes, is larger than the true watts expended in the furnace. The ratio of the watts to the volt-amperes supplied to the furnace, is its "power-factor." The power-factor is usually high in electric furnaces, often over 90 per cent.; but in induction furnaces, such as the Kjellin furnace, it is frequently much lower, sometimes as low as 60 per cent.

A low power-factor is very undesirable because, for the same power, the volt-amperes and consequently the cost of the electric generating plant will be higher than with a high power-factor.

To keep the power-factor as high as possible one should avoid carrying heavy currents through closed loops of iron, and the outward and returning conductors should be kept as close together as possible. For this reason the bus-bars carrying the current to and from a furnace are often interlaced as shown in the illustration of the Keller furnace, Fig. 96. The power-factor of a furnace is not a function of its construction merely but depends also on the frequency of the current supplied to it; low-frequency current giving a higher factor than high-frequency current. On this account 25-cycle current is often used in electric smelting in preference to 60-cycle current.

Electric Measurements.—In electric smelting, the voltmeter and voltage coil of the wattmeter can be connected directly to the furnace terminals, or the bus-bars supplying these, as electric furnaces are almost always operated at moderate voltages; but the currents supplied to electric furnaces are in general very large and only a small fraction of the whole current flows through the ammeter and current coil of the wattmeter for the purpose of measurement. In the case of direct currents this is effected by means of a shunt

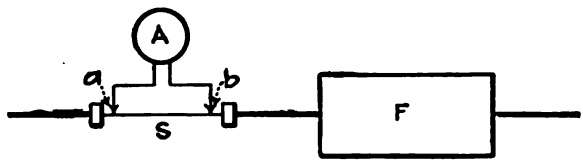

FIG. 54.—Shunt and ammeter.

(marked *S* in Fig. 54); this has a low resistance (between the points *a* and *b*) which is an exact fraction of the resistance of the ammeter *A* and connecting wires. The indication of the ammeter must therefore be multiplied by a factor to give the value of the whole current.

In the measurement of alternating current a current-transformer is used. This is a small transformer Fig. 55, having the low-tension winding *S* in the main circuit and the high-tension winding *s* in circuit with the ammeter and the wattmeter. The current in this circuit is a definite fraction of the current in the main circuit and

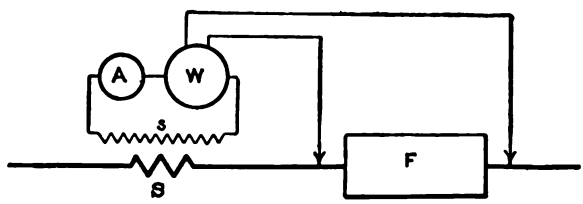

FIG. 55.—Current transformer.

the readings of both the ammeter and the wattmeter must be multiplied by a constant to obtain the amperes and watts supplied to the furnace *F*. In most cases the low-tension winding *S* is not a part of the current transformer but is merely a piece of the cable, or conductor, carrying the current to the furnace. The current transformer then consists of the high-tension winding *s* and the iron core, which passes through the winding *s* and can be looped around the main conductor.

When using two-phase current, an ammeter, voltmeter and wattmeter, would be needed for each phase, and the total power would be the sum of the two wattmeter readings. Fig. 56 shows how these would be arranged in the case of a two-phase furnace having two

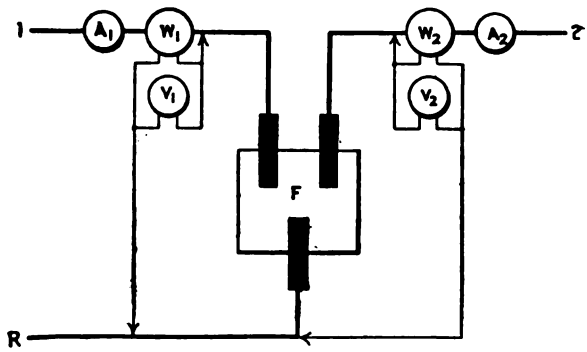

FIG. 56.—Two-phase furnace measurements.

supply cables, 1 and 2, and a common return *R*. The ammeters and wattmeters have, for simplicity in the figure, been shown in the main circuit.

When three-phase current is supplied to three furnaces, as in

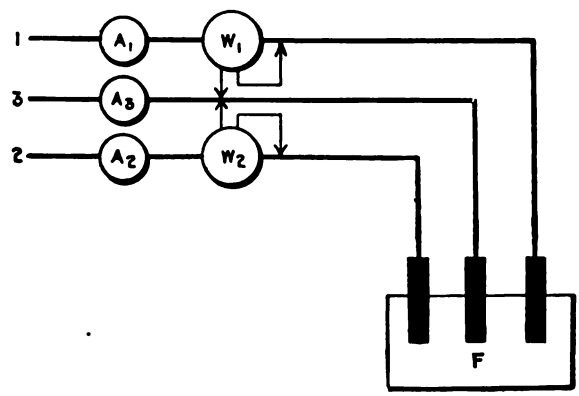

FIG. 57.—Three-phase furnace measurements.

Figs. 51 and 52, each furnace has single-phase current and will be provided with separate meters as in Fig. 55; but when a single furnace is operated by three-phase current, two wattmeters, connected as in Fig. 57, will suffice to measure the total power. In this

case conductor 3 may be regarded as the return from 1 and 2 and the sum of the two readings of W_1 and W_2 gives the whole power of the furnace. An ammeter should be provided for each of the three electrodes in order that the currents drawn by each may be kept equal.

RATE OF HEAT PRODUCTION IN ELECTRIC FURNACES

As already mentioned, the rate at which heat is produced in an electric furnace may be measured by the number of watts of electrical power supplied to the furnace, allowance being made when necessary for any electrolysis that takes place. A certain rate of heating is necessary for the attainment of a definite temperature; this rate depending on the thickness and heat-retaining qualities of the furnace walls, upon the size of the furnace, and upon any cooling influence, such as the introduction of fresh ore to the furnace. The greater the rate of heat production in an electric furnace, the greater in general will be its efficiency.[1] A few examples will now be given of the rate of heat production in typical electric furnaces, the rate being given in watts per cubic inch, or in kilowatts per cubic foot.[2]

In Moissan's small furnace, Fig. 6, which was composed of blocks of quicklime, he employed 35 to 40 amperes of direct current at 55 volts, or 1,900 to 2,200 watts.[3] The interior cavity of the furnace was about 1.75 in. in diameter, and about 1.7 in. in height, corresponding to a volume of 4.1 cu. in. The watts per cubic inch will, therefore, be 470 to 540, or say 500 as a round figure. Some allowance should be made for the heat produced in the electrodes themselves, and this would leave perhaps 400 or 450 watts per cubic inch for the interior of the furnace. This figure, as will be seen directly, is about 100 times as great as the usual rate of heating in a fair-sized electric furnace, as used for steel-making, for instance.

Moissan's electric tube furnace, contained a carbon tube in which the material to be heated was placed, and the furnace itself was composed of limestone, and was lined with alternate layers of carbon and magnesia. In this furnace he employed 300 amperes at 70 volts (=21,000 watts), or 1,000 amperes at 60 volts (=60,000

[1] Attention has been called to this feature of electrical heating by Dr. Carl Hering, "Advantages of Small High-speed Electric Furnaces." Met. and Chem. Eng., xi, 1913, p. 183.

[2] 1 Watt per cubic inch = 1.728 kw. per cubic foot.

[3] H. Moissan, The Electric Furnace, p. 5

watts).[1] The dimensions of the interior of the furnace, assuming that his perspective drawings are to scale, would be 4.4 in. long, 3.2 in. wide, and 4 in. high; corresponding to a volume of 56 cu. in. The watts per cubic inch would vary from 380 to 1,100. A deduction for the heat produced in the electrodes themselves would reduce these figures by 10 per cent. or 20 per cent.

An even more intense rate of heating is mentioned, in which he employs 1,200 to 2,000 amperes at 100 volts in an unlined limestone furnace.[2] The internal diameter is stated to be 4 in., and assuming the height to be the same, the volume of the cavity would be 50 cu. in. The watts supplied would be 120,000 to 200,000, or 2,400 to 4,000 watts per cubic inch. The operation of this furnace is only of short duration, the lime, produced by heating the interior of the limestone blocks, soon melting, and running like water, while vaporized lime roars out around the electrodes, and the furnace is soon destroyed. The temperature produced was limited by the rapid melting and vaporizing of the lime, but by supplying the heat at such an enormous rate, the greater part of the cavity might well be considerably hotter than the boiling temperature of melted lime.

The small furnace, first mentioned, could be used for longer periods, as the rate of heat production was so much less, and the furnace was therefore less rapidly destroyed; while the tube furnace, lined with carbon and magnesia, could be run continuously.

The Stassano steel furnace, Fig. 109, resembles the Moissan furnace, as the ore to be smelted is heated by radiation from an arc. The furnace described by Dr. Goldschmidt in 1903,[3] which is somewhat larger than the one figured in Dr. Haanel's Report,[4] took an alternating current of 2,000 amperes at 170 volts, and used about 450 h.p. The horse-power corresponds to 336 kw., but part of this would be wasted outside the furnace. The volt-amperes are 340,000, and assuming a power-factor of 0.75, this would give 255 kw. consumed in the furnace. The interior of the furnace was about 40-in. cube, or 64,000 cu. in., giving 4 watts per cubic inch, or 6.9 kw. per cubic foot. The difference between this rate of heating and that employed by Moissan, depends in part upon the lower temperature required, in part upon the great loss of heat produced by the vaporizing of the materials of the Moissan furnace, and in

[1] H. Moissan, The Electric Furnace, p. 17.
[2] H. Moissan, The Electric Furnace, p. 14.
[3] Electrochemical Industry, vol. i, p. 247.
[4] European Commission Report, p. 11 and Figs. 9 and 10.

part upon the larger size and better heat-retaining construction of the Stassano furnace.

The Héroult steel furnace at La Praz, Fig. 93, figured by Dr. Haanel,[1] is about 7 ft. long, 4 ft. wide, and 2 ft. high inside, giving a volume of 56 cu. ft. The power employed was 353 kw.,[2] or 6.3 kw. per cubic foot, which agrees well with the Stassano furnace.

The furnace employed at Sault Ste. Marie, for smelting Canadian iron-ores, Fig. 78, had an interior volume of 18.4 cu. ft., and consumed about 166 kw. of electrical power, or 9 kw. per cubic foot.[3] This is only a little larger than the figures for the Héroult steel furnace:—6.3 kw. per cubic foot, and the Stassano furnace,—6.9 kw. per cubic foot; but the meaning of the figure is not quite the same. The whole interior of the Stassano and Héroult steel furnaces is heated to about the melting temperature of the steel, and the rate of heat production for each cubic foot of the furnace is of the first importance in determining the temperature to which the furnace can be heated. In the Héroult ore smelting furnace, however, the temperature is far from uniform throughout the interior, only the lower part being heated to a smelting temperature; and the volume of the upper part of the furnace, where the ore is gradually heated during its descent to the smelting zone, could be very much greater without the change having any material effect upon the temperature in the smelting zone of the furnace. In such a furnace it is consequently of little importance to consider the total volume in relation to the electrical power, a more significant figure being obtained by dividing the kilowatts by the volume in cubic feet of the fusion or smelting zone of the furnace. This zone is necessarily difficult to define, but assuming that the electrode, *C*, in Fig. 78, is in its normal working position, the smelting zone would occupy about 7 cu. ft., making the electrical power 24 kw. per cubic foot of the zone.

The rate of heating, in the smelting zone of this furnace, is very much greater than in a steel furnace, and this is explained by the constant supply of cooler material which absorbs most of the heat. The efficiency will tend to increase as the furnace is driven faster; but with the more rapid smelting, the zone of fusion will become enlarged; thus corroding the walls of the furnace. There is con-

[1] European Commission Report, p. 5 and Figs. 3 and 4.

[2] European Commission Report, p. 53.

[3] Dr. Haanel, Report on Experiments at Sault Ste. Marie, 1907, p. 46, and plate vii. (Also in the "Canadian Engineer," vol. xiii, pp. 221 and 254.)

sequently a limit beyond which it is not desirable to increase the rate of heating in electric furnaces.

The Keller furnace, Fig. 79, consists of two smelting shafts, with a common reservoir for the molten products. Taking the dimensions from Figs. 11 and 12 of Dr. Haanel's European report, the smelting zone, *AB*, of each shaft, omitting the connecting passage, CC^1, which acts as a reservoir for the fused iron and slag, will occupy about 19 cu. ft. The power used, in the first run of furnaces, Nos. 11 and 12, was 613 kw.,[1] or 306 kw. for each of the two shafts. This is equal to 16 kw. for each cubic foot of the fusion zone. If the whole volume of the shaft were considered, the power would correspond to 5 kw. per cubic foot, or to 6 kw. per cubic foot of the shaft up to the level, *FG*, at which the gases escape from the furnace.

These figures are less than were obtained from the Héroult furnace; the difference being mainly due to the larger size of the Keller furnace, in which the smelting zone was three times as large as in the Héroult furnace. The larger size of the Keller furnace occasioned a smaller loss by radiation and conduction per cubic foot, and a correspondingly smaller rate of heat production was required. In this connection it should be mentioned, that the rate of smelting, per cubic foot of smelting zone, in the Keller furnace, was less than one-third of the rate of smelting in the Héroult furnace, while the consumption of electrical energy per ton of pig-iron was twice as great in the Keller furnace as in the Héroult furnace. This seems to indicate that the supply of power in the Keller furnace was not quite sufficient; but as this furnace was working badly as a result of a shut-down, it is unsafe to draw deductions from its rate of smelting.

Better results were obtained in the second run, with the Keller furnaces Nos. 1 and 2.[2] These were stated to be identical with Nos. 11 and 12, with the exception of the connecting channel, which was absent in Nos. 1 and 2. Assuming the smelting zone to be of the same size, the rate of heat production would be only 6 kw. per cubic foot of this part of the furnace. The energy consumption per ton of pig-iron, in these furnaces, was a little less than in the Héroult furnace.

In the Kjellin steel furnace, Fig. 102, no electrodes are employed: the steel is contained in a ring-shaped trough, and is melted by an electric current which is induced in the steel just as in the secondary windings of a transformer.

[1] Dr. Haanel's European Report, 1904, p. 40.

[2] Dr. Haanel's European Report, 1904, p. 44.

The furnace shown in Dr. Haanel's report,[1] has a trough of 13 cu. ft. capacity. The power delivered to the primary of the transformer was 150 kw. Assuming the transformer losses to be 10 per cent. of this, 135 kw. would be supplied to the molten steel, or 10 kw. per cubic foot of the furnace.

This figure is larger than in the Héroult steel furnace, and the difference may be partly accounted for by the larger amount of waste space in the latter furnace. The efficiency of the Kjellin furnace is low, on account of the small cross-section (6 in. by 18 in.) of the trough containing the molten steel; and a somewhat small cross-section appears to be necessary in this type of furnace.

The Gin steel furnace, Fig. 108, resembles the Kjellin furnace in consisting of a long trough or canal, of small cross-section, containing the molten steel; but the electric current is introduced at the ends of the trough through water-cooled steel terminals. In order to reduce the loss of heat, the canal is folded upon itself like the filament of an incandescent lamp.

Mr. Gin calculates the dimensions for a number of furnaces in a paper that has been printed in Dr. Haanel's report.[2] For a 700-kw. furnace, the volume of the steel in the trough would be 19.5 cu. ft., and assuming the trough to be half filled by the molten steel, its capacity would be 39 cu. ft., corresponding to 18 kw. per cubic foot of the trough. The trough would be nearly 30 ft. long, 9 3/4 in. wide, 19 1/2 in. deep, and half full of molten steel.

In the Acheson furnaces, Figs. 8 and 115-117, the heat is produced by the passage of an electric current through a central core or through the charge itself. The charge does not melt, and remains nearly in the same position until the end of the operation. Very little data is available with regard to the actual working of these furnaces. The following examples may be given:—

In a patent by Dr. Acheson[3] for a method of making carbon articles of a high density and conductivity by heating them in an electric furnace without reaching the point of graphitization, the furnace is stated to be 30 ft. long, 30 in. wide, and 10 in. deep inside. The power used was about 750 kilo-volt-amperes. Assuming the power-factor to be 0.9 this would correspond to 10 or 11 kw. per cubic foot of the furnace.

[1] Dr. Haanel's European Report, 1904, p. 2 and Fig. 1.

[2] Dr. Haanel's European Report, 1904, p. 173.

[3] E. G. Acheson, U. S. patent 749,418, see Electrochemical Industry, vol. ii, p. 108.

The Acheson graphite and electrode furnaces are described by F. A. J. FitzGerald[1] who takes the data in part from Acheson's patents. The graphite furnace is said to be 30 ft. long, 14 in. wide, and 18 in. deep, thus having a volume of 52 1/2 cu. ft.[2] The current at the beginning of the run is stated to be 3000 amperes at 200 volts, and FitzGerald assumes that when the furnace has become heated it absorbs 750 kw. The latter figure would correspond to 14 kw. per cubic foot. In the electrode furnace, the length between terminals is 30 ft., and the cross-section of the piles of electrodes under treatment is 24 in. by 17 in. Allowing a few inches of granular carbon around the electrodes, the volume of the furnace would be 150 cu. ft.; 700 kw. were employed, corresponding to less than 5 kw. per cubic foot. If no allowance were made for the granular carbon, the rate of heating would be 8 kw. per cubic foot of the charge.

A drawing of the carborundum furnace[3] shows it to be 16.5 ft. long, 6 ft. wide and 5.5 ft. high inside. The power used is 750 kw., which is only 1.5 kw. per cubic foot. If, however, it is considered that part of the charge in the furnace serves as a heat-retaining wall, and the calculation is limited to that portion of the charge which is converted into carborundum, the rate of heating is found to be 3 kw. per cubic foot.

Collecting the results obtained above for the power required per cubic foot of electric furnace, the following general figures may be given for moderate or large-sized furnaces, using from 200 to 1,000 h.p.: Steel melting furnaces, such as the Héroult and Stassano furnaces, employ 5 to 8 kw.; steel melting furnaces such as the Gin or Kjellin furnaces employ 10 to 20 kw.; ore smelting furnaces, such as those of Keller and Héroult, employ about 10 to 20 kw. per cubic foot of the zone of fusion; and the power used in furnaces of the Acheson type varies from about 3 kw. in the carborundum furnace to about 10 kw. in the graphite furnace. Small-sized furnaces for electric smelting may employ as much as 30 to 100 kw. per cubic foot,

[1] F. A. J. FitzGerald, The Ruthenburg and Acheson Furnaces, Electrochemical Industry, vol. iii, p. 416.

[2] E. G. Acheson, U. S. patent 711,031, see Electrochemical Industry, vol. i, p. 130. The author has been informed by the Acheson Graphite Company that these dimensions are incorrect. If as seems reasonable to suppose the cross-section for a 750-kw furnace is somewhat larger than stated above, the rate of heating would be proportionately reduced, and would agree more nearly with the other figures for this class of furnace.

[3] The Carborundum Furnace, F. A. J. FitzGerald, Electrochemical Industry, vol. iv, p. 53.

and Moissan used no less than 500 to 5,000 kw. of electrical power per cubic foot of his furnaces.

VOLTAGE REQUIRED FOR ELECTRIC FURNACES

Having determined how many **watts** should be supplied to the furnace, the **voltage** of the supply must next be considered. The watts supplied are, for direct current, the product of the amperes and the volts, while for alternating current they are somewhat less; the product of volts and amperes being multiplied by a factor—the power-factor—which varies from about 0.7 to 0.95 in different forms of furnace, in order to obtain the watts. The heat produced depends simply upon the product of volts, amperes and power-factor,[1] so that it would appear possible to use either a high or low voltage, provided the watts were sufficient. If a moderate current at a high voltage could be employed, it would be a great convenience, but this is usually impracticable, because it is not generally feasible to construct a furnace having a sufficiently high electrical resistance.

The whole problem turns upon the electrical resistance of the resistor *R*, Fig. 25. Suppose that a furnace needs 250 kw. to heat it, then, taking direct current for simplicity, in illustration, if the furnace resistance were 1 ohm, a 500-volt supply would drive a current of 500 amperes through the furnace and would develop the necessary 250 kw. If, however, the furnace had a resistance of only 0.01 ohm, the current, in amperes, would be 100 times the volts, and 5,000 amperes at 50 volts would be needed. The latter case is approximately that of the experimental Héroult furnace used by Dr. Haanel, and shows what enormous currents will have to be supplied to electric smelting furnaces, if constructed on any considerable scale, since the amperes increase with the size of the furnace far more rapidly than the volts. The use of such enormous currents is inconvenient and increases considerably the cost of cables, transformers, electrodes and electrode holders.

Voltage of Arc-furnaces.—The voltage of a resistance furnace is nearly proportional to the current flowing through it. To double the current, nearly twice the voltage would be needed; but in an arc-furnace (except perhaps in the Moissan furnace, which is so small that the arc fills the furnace) the voltage does not increase

[1] Assuming that all the energy is converted into heat, and none of it spent in chemical work, such as electrolysis.

considerably with increase of current, and the voltage of the arc itself is often less as the current increases. This sounds impossible, but it is a well-established fact, and points to the instability of the arc unless a steadying resistor is placed in series with it. In a large furnace the resistance of the cables, electrodes and transformer or electric generator is usually sufficient for the purpose, but the writer has frequently extinguished the arc in an experimental furnace by turning on too much current, that is by cutting out too much of the regulating rheostat, and so applying too high a voltage to the arc. The resistance of an arc is not constant, but as the current increases the arc becomes larger in cross-section and its resistance decreases in about the same proportion, or even faster than the current increases; the voltage in consequence remains constant or decreases.

A certain minimum voltage, which varies from about 25 to 35, is needed in order to start an arc at all; beyond this the voltage increases with the length of the arc, on account of the additional resistance that is introduced as the carbons are drawn farther apart. The voltage of an ordinary lighting arc may be obtained by the formula:

$$E = m + nl$$

E is the voltage, l is the length of the arc in inches, and m and n are constants, which for good pure carbons have the values 40.6 and 40 respectively.[1] The constants would be smaller for arcs between cored carbons, for arcs enclosed in a furnace, so that the heat of the arc was retained, and for alternating-current arcs. The following figures may be given as examples of direct-current arcs in small furnaces; they have been selected from the work of Henri Moissan, whose furnace is shown in Fig. 6.

TABLE XIV—VOLTAGE OF MOISSAN'S ARC FURNACE.

Amperes	Volts	Amperes	Volts
35–40	55	800	110
100	45	900	45
250	70, 75	1,000	50, 60, 70, 80, 110
300	60, 70, 85	1,200	70, 100, 110
400	80	2,000	60, 80, 100
450	60, 75	2,200	60, 70
600	60		

This table indicates that the voltage of the arc is not determined by the amount of current flowing through the furnace, but depends

[1] Electric Lighting, by F. B. Crocker, vol. ii, p. 308.

mainly upon the length of arc and the kind of vapor present in the furnace. The length of arc is unfortunately not given, but probably varied from about half an inch to 2 in. or 3 in.; aluminium vapor is mentioned as giving a long arc of 2 in. to 2 1/2 in. and the 2,000 and 2,200 ampere arcs at 60 volts were obtained in the presence of iron vapor. The actual voltage across the arc will be somewhat less than the figures given, on account of the drop of volts along the electrodes as well as in the connections. This drop is quite considerable in the case of heavy currents, and would vary from about 5 to 20 or even 30 volts depending on the current and the size of carbon employed.

Alternating current is generally used in arc furnaces intended for industrial use and the Héroult and Stassano steel furnaces may be taken as examples.

The Stassano furnace, Fig. 109, resembles the Moissan furnace in general construction. A long arc, *GH*, is maintained between the ends of somewhat slender electrodes, and when the furnace becomes thoroughly hot, the arc may be drawn out until it traverses the whole width of the furnace. In one furnace[1] the width was 39 in., and an alternating-current arc of 2,000 amperes at 170 volts was used. It will be seen that this voltage is very much lower than would be required by the formula given above; the high temperature of the furnace, the presence of metallic and other vapors, and the use of alternating instead of direct current all contribute to this effect.

The Héroult furnace, as shown in Fig. 93, resembles a Wellman tilting open-hearth furnace from which the gas and air ports have been removed. These are replaced by two large carbon electrodes, *C*, *C*, which enter through holes in the roof. The furnace is basic lined, but it would be possible to employ an acid lining. The arc does not play from one carbon to the other, as in the Moissan and Stassano furnaces, but there is an arc between each electrode and the slag and metal immediately beneath it. In this way the heat of the arc is communicated directly to the metal, and as two arcs are produced in series, the voltage of the furnace will be twice as great as that of a single arc. The furnace seen by the Commission at Kortfors took 4,000 amperes at 125 volts, the power supplied being about 450 kw.,[2] while the smaller furnace at La Praz took nearly 4,000 amperes at 108 volts, the power supplied being 350 kw.[3]

[1] Electrochemical Industry, vol. i (1903), p. 247.

[2] Dr. Haanel, European Report, 1904, p. 52.

[3] Dr. Haanel, European Report, 1904, p. 54.

The voltage of each arc in these furnaces will be about 45 or 55, and the arc will be quite short, the carbons being kept just clear of the slag.

Voltage of Resistance Furnaces.—Resistance furnaces have usually a lower voltage than arc furnaces of the same size. The Héroult ore smelting furnace, Fig. 78, is of the resistance type, as no arc is formed; the current flowing between the movable electrode *C*, and the carbon lining at the bottom of the furnace, through the solid and liquid materials in the smelting zone. The electrical resistance of these materials causes the energy of the current to be converted into heat and largely determines the voltage of the furnace; the voltage being higher for a given current, if the contents of the furnace have a higher electrical resistance. In the experiments with this furnace, only 36 volts were required to maintain an alternating current of 5,000 amperes.[1]

The Keller ore smelting furnace, Fig. 79, is equivalent to two Héroult furnaces, with a connecting passage between the crucibles of the two furnaces. This passage serves as a reservoir for the molten slag and iron, and also serves to connect electrically the molten metal at the bottom of each furnace: an alternative passage for the current, in case the reservoir were emptied at any time, is provided through the carbon plugs BE, B^1E^1, and copper connector EE^1. Electrically, the two furnaces are arranged in series, the current being supplied through the two movable electrodes DA, D^1A^1, and passing in series through the two smelting zones, AB, A^1B^1; and the voltage is in consequence twice as great as in a single furnace of the Héroult type. In the experiments made by Dr. Haanel at Livet,[2] the double shaft furnace, Nos. 11 and 12, took a current of 11,000 amperes at 59 volts, and the double furnace, Nos. 1 and 2, took 7,250 amperes at 55.3 volts.

For a given size and shape of furnace, and for a constant distance between the electrodes and the molten iron in the bottom of the furnace, the voltage of the furnace will increase with the current that is passed through it. The voltage will increase less rapidly than the current, however, because at the higher temperatures produced by the increased current, the electrical resistance of the furnace contents will be less than it was with the smaller current, and so the ratio of voltage to current will be reduced. If the cross-section of the furnace were increased, so that the current density

[1] Dr. Haanel, Report on Experiments at Sault Ste. Marie, 1907, p. 52.

[2] Dr. Haanel, European Report, 1904, p. 36.

remained constant, *i.e.*, the number of amperes for each square foot of cross-section of the furnace was the same as before, the voltage would remain constant; and if the height of the furnace and the distance between the movable electrode and the bottom of the shaft were increased proportionately, the voltage would increase in the same ratio. That is to say, in furnaces of similar shapes, but of different dimensions and for constant current densities, the voltage will be proportional to the linear dimensions, and the current will be proportional to the square of these dimensions. It follows from this, that the voltage is proportional to the square root of the current, and as the size of electric furnaces is increased, the voltage necessary to operate them will also increase; but with far less rapidity than the electrical current which must be supplied. In practice, the voltage will tend to increase less rapidly than the dimensions of the furnace; because in large furnaces the same current density would produce a rather higher temperature, and so would make the charge a better electrical conductor, or smaller current densities could be employed which would need a lower voltage.

The voltage of an ore smelting furnace of the Keller or Héroult type depends mostly upon the height to which the electrode is raised from the bottom of the furnace, and this can easily be changed during the smelting operation, thus affording a convenient means of regulating the electric current. If the current were supplied to such a furnace at an absolutely constant voltage, any change in the resistance of the furnace would lead to a change in the amount of current, the voltage remaining constant; and in running a furnace under such conditions, the electrode would be lowered to increase the current, and raised to decrease it. In practice, the voltage at the furnace terminals is not absolutely constant, but decreases with an increase of current, on account of the resistance of cables, transformers, etc.; and, in consequence, the volts and amperes supplied to a furnace will usually vary in opposite directions. This refers, of course, to changes in the current produced by changes in the furnace itself; external changes such as a change in the speed of the dynamo supplying the current would reduce or increase both the volts and the amperes. The drop of voltage that accompanies an increase of current is not objectionable in electric smelting, and it serves to some extent as an automatic regulator of the current.

CURRENT DENSITY IN FURNACES

After considering the rate of heating or "power density" of a furnace, and the voltage at which it is operated, the subject of "current density" need only be considered briefly. The current density in a furnace will usually vary considerably from point to point, except where the current flows through a resistor of regular dimensions. In some smelting furnaces the current may be distributed so evenly through the contents of the furnace, that we can take the current density as the number of amperes divided by the internal cross-section of the furnace measured at right angles to the direction of the current. In the Héroult ore smelting furnace, Fig. 78, the cross-section at the level *D* is 5.4 sq. ft., and the current 5,000 amperes, giving an average current density of 930 amperes per square foot, or nearly 6 1/2 amperes per square inch. The Keller ore smelting furnace at Livet had a current density of 10 or 12 amperes per square inch of cross-section. In the Acheson carborundum furnace the current density, according to published accounts, varies from 10 to 30 amperes per square inch of the core, and in the Kjellin induction furnace, there may be as much as 600 amperes per square inch of cross-section of the molten metal.

"Pinch Effect."—The current density in molten conductors is limited by a curious phenomenon, which was first investigated by Dr. Hering.[1] In operating furnaces of the Kjellin or the Gin type, if the current density is increased beyond a certain amount the surface of the metal becomes depressed at some point, and the depression may increase until it divides the conductor, and thus interrupts the current. It is well known that parallel conductors attract each other when electric currents flow through each in the same direction; and the same force urges together the particles of a molten conductor carrying a current. If this conductor is cylindrical, all the particles of which it is composed tend to move toward the axis, but as the resulting pressure at the axis is equal at every point along the length of the cylinder, no apparent effect is produced. If however the conductor is initially somewhat smaller in cross-section at one point than elsewhere, the current density here will be greater, and the radial forces will therefore be greater, producing

[1] Carl Hering, "A Practical Limitation of Resistance Furnaces; the 'Pinch' Phenomenon." Trans. Am. Electrochem. Soc., xi, 1907, p. 329. "The Working Limit in Electrical Furnaces Due to the 'Pinch' Phenomenon." Trans. Am. Electrochem. Soc., xv, 1909, p. 255.

a greater pressure at the axis and therefore causing the conducting liquid to move along the axis away from the point of small cross-section. This causes a pinching of the conductor at this point.

The pressure produced at the axis of a cylindrical liquid conductor, by the electro-magnetic attraction of the particles composing it, has been calculated by Dr. Northrup and is given by the formula:[1]

$$P = \frac{C^2}{44{,}479{,}100\, S}$$

in which P is the pressure at the axis in pounds per square inch, C is the total current (either direct or alternating) in amperes, and S is the cross-section in square inches.

In a conductor of varying cross-section, the value of P varies from point to point along the axis, and this causes an axial flow of the liquid from points of small to points of large cross-section; the liquid so displaced returning along the surface of the conductor. This circulation, which has been termed the "jet effect," is an essential feature of the Hering furnace, Fig. 21.

If the molten conductor lies in an open channel, as in the Kjellin furnace, the attraction between the conducting particles tends to depress the surface of the metal at any point of restricted cross-section. This action, if not too strong, may be balanced by the hydraulic pressure tending to keep the liquid level; but if the depression amounts to a certain proportion of the original depth of the liquid, the equilibrium between these forces becomes unstable, as at this point any further decrease in cross-section increases the pinching force (by raising the current density) more rapidly than it increases the restoring force due to difference of level, and the conductor suddenly breaks in two.

Dr. Hering finds that for a conductor of rectangular cross-section this critical condition should be reached when the depth of the liquid has been reduced to half its original amount. Taking a conductor having originally a depth equal to twice its width, so that with the critical current the pinched portion will be square in section, Dr. Hering offers the formula:

$$CD = 895\sqrt{\frac{G}{H}}$$

[1] In the original formula, as modified by Dr. Hering, Trans. Am. Electrochem. Soc, xv, 1909, p. 257. S stands for square centimeters and P for pounds per square centimeter. The formula is unaffected by this change from square centimeters to square inches.

in which CD is the critical current density in amperes per square inch of the original section, G is the specific gravity of the molten metal, and H is the depth of the metal in inches.

In the case of an induction furnace having a ring of molten iron ($S.G.=6.88$) 10 in. $\times$ 5 in. in cross-section, the critical current density, above which pinching would take place, would be 742 amperes per square inch of the original section, or a total current of 37,100 amperes.

REGULATION OF ELECTRIC FURNACES

Under this general heading may be considered the regulation of the electrical power supplied to a furnace, the regulation of the electrodes, and the supply and removal of the material to be treated.

The regulation of the power may be effected by means of the electrodes themselves as in the Héroult and other steel furnaces, the electrodes being adjusted so that the current through each is kept constant, or that a constant voltage is maintained between each electrode and the contents of the furnace. This is usually effected by electric motors which raise or lower the movable electrodes. The motors are started, stopped, and reversed, by instruments operated by the voltage of the furnace, in such a manner as to keep this constant. In the Keller furnace, Fig. 79, and the Héroult steel furnace, Fig. 93, there are two movable electrodes; each of these being independently regulated so as to keep a constant voltage between itself and the molten metal in the furnace. The automatic regulating apparatus for the Héroult furnace is described in Dr. Haanel's report.[1]

The change in electrical resistance due to a change in the height at which the electrode is kept in a smelting furnace, affords a means of adapting the furnace to a variety of voltages. Electrically, it is advantageous to operate the furnace at as high a voltage as it will take, and it is, therefore, important to ascertain how high the electrode can be raised without causing trouble in the furnace. The exact height that is most desirable will depend upon a number of factors, such as the shape of furnace, size of electrode, nature of the charge, and amount of current; but the distance between the electrode and the molten slag in a shaft smelting furnace should probably be less than the width of the crucible of the furnace.

In large electrical smelting furnaces, such as the iron furnaces at Domnarfvet and Trollhättan, see Figs. 90 and 92, the regulation

[1] Dr. Haanel, European Report, 1904, p. 6.

is not effected by means of the electrodes, which are only moved at long intervals as they wear away, but by a regulating device which controls the voltage of the electrical supply, see Fig. 49. This device raises or lowers the voltage, as the resistance of the furnace changes, so as to maintain a constant supply of power.

In other types of resistance smelting furnaces, the current passes through the molten slag and metal, instead of through the melting ore, the current entering by means of two or more carbon electrodes which dip into the fused slag, as in the Harmet furnace, Fig. 80; by electrodes of fused metal lying beneath the slag, as in the Laval furnace, Fig. 20; or by induction, without the use of electrodes, as in the Snyder furnace, Fig. 131. In such furnaces, the slag becomes heated above its melting temperature, by the passage of the current, and melts or dissolves the ore which rests upon it. The voltage depends upon the shape and size of the furnace, but on account of the low specific resistance of molten slags it will usually be lower than in furnaces in which the current passes through the melting ore, as well as through the fused slag. The molten metal accumulating in the bottom of the furnace will also tend to lower the voltage, by carrying, on account of its greater conductivity, a large part of the current. It is not practicable to regulate such furnaces by moving the electrodes, and the regulation must be effected by adjusting the voltage of the supply as explained above.

In the Kjellin and Gin furnaces, the electrical resistance of the steel itself is relied upon for converting the energy of the current into heat. The specific resistance, or resistivity, of steel, even when molten, is so small that the metal must be contained in a trough or canal of considerable length and moderate cross-section, in order to have any appreciable electrical resistance; and even then, the voltage is very small, and enormous currents must be supplied, in order to heat the furnace. In the Kjellin furnace, already referred to, a current of 30,000 amperes is supposed to circulate around the ring of molten steel; the force required to drive such a current being only 7 volts. In the Gin furnace, the voltage is also very small; 15 volts maintaining currents that range from 10,000 to 100,000 amperes. Furnaces of such low resistance are very unsatisfactory electrically; but the absence of carbon electrodes, and the production of the heat directly in the molten steel, render them very suitable for steel-making.

In the Acheson furnaces, the resistor consists of a special core of carbon, surrounded by the charge, or the charge itself is the resistor.

In either case, the resistor remains solid during the operation, and cannot be lengthened or shortened in order to regulate the current. Moreover, as the furnace is intermittent in action, the temperature of the resistor is not constant, as in a smelting furnace, but rises continuously during the run. This rise of temperature reduces very considerably the resistance of the furnace, and hence, the relation between the volts and the amperes. For example, if the furnace had a core of coke, the resistance would fall to about one-half its original value when the furnace became thoroughly hot, and if the heat were sufficient to graphitize the coke, the resistance would fall still further, the resistance of the heated graphite being only about one-sixth of that of the cold coke from which it was originally produced. Such a furnace would be very difficult to operate with a constant voltage supply; because if it were proportioned so as to draw a suitable current when heated, the current that would flow through the cold furnace would be so small (only one-sixth of the final current), that the furnace would heat up very slowly, and the consumption of power would change very considerably during the run. The price paid for electrical energy is usually based upon the maximum rate at which it will be used, and a furnace which only used 15 to 25 per cent. of its maximum power for a large proportion of the run, would be very inefficient financially. It is necessary, therefore, to change the voltage of the supply during the run, and for this purpose a special induction regulator has been devised, which will change the voltage from about 200 volts at the beginning of the run to 80 volts at the end of the run, maintaining the same power (about 1,000 h.p.) all the time.[1] More recently the voltage regulator, shown in Fig. 49, has been used for operating the carborundum furnaces at Niagara Falls.

It will be noticed that the change in the voltage is less than the change in the resistance of the furnace. This follows directly from the relationship between volts, amperes, and watts, because (omitting any consideration of inductance), the voltage must vary, for constant power, as the square root of the resistance of the furnace. Thus, if P is the power in watts, E the voltage, I the current in amperes, and R the resistance in ohms:

$$P = EI, \text{ and } I = \frac{E}{R}, \text{ therefore } P = \frac{E^2}{R}$$

or, for constant power, E must vary as the square root of R.

[1] F. A. J. FitzGerald, Miscellaneous Accessories of Resistance Furnaces, Electrochem. Industry, vol. iii, p. 11.

The means employed for the regulation of electrodes depends mainly upon whether this regulation serves to control the supply of power or whether it is merely needed to advance the electrodes as they wear away. In the former case automatic regulation is usually employed, as in the Héroult steel furnace and many carbide furnaces, while in the latter case the regulation is usually by hand; some simple mechanism being used to give the necessary power, as in the furnaces at Domnarfvet and Trollhättan. Some exceptions to this general rule are the Stassano, Keller, and Girod steel furnaces, in which the regulation of the electrodes is by hand, although this regulation serves also to control the current.

The regulation of electric furnaces by the supply and removal of the material that is being treated, which may thus be given a shorter or longer time in the furnace, varies too much in individual cases to be considered generally. In intermittent furnaces of the Acheson type, the charge is placed in the furnace, which is then heated, allowed to cool, and finally discharged. In such cases the length of the operation will affect the character of the product and this will, in general, be determined by experience, although in some cases an observation of the furnace temperature may assist in determining when the operation is complete. In other furnaces, such as the Willson carbide furnace, the charge is introduced continually by a mechanical device, until the furnace is full; when it is allowed to cool before being discharged. It is generally desirable in electric furnaces to have the charging and discharging as nearly continuous as practicable. A continuous movement of the charge through the furnace takes place in nitric-acid furnaces, and in certain other furnaces in which the material to be heated is a rod or strip which is moved continuously through the furnace. In this case the speed at which the material is moved will determine the time during which it is subjected to the heat of the furnace. In smelting furnaces a charge may be added in weighed amounts at short intervals, or may be fed continuously by charging machinery, while the molten product, usually metal and slag, is tapped out at intervals. In such furnaces the charging and tapping must be carried out in accordance with the rate of smelting of the furnace, and these have no regulating effect on the furnace operation.

MEASUREMENT OF FURNACE TEMPERATURES

In many furnace operations it is very important to be able to measure the temperature attained, and pyrometry, or the measure-

ment of high temperatures, has developed rapidly during recent years.

Although many electrical furnaces operate at so high a temperature that no pyrometer can be placed in them, a number of furnaces are now used for smelting purposes at comparatively low temperatures, below, for example, 1,500° C, or 1,600° C, and for such furnaces several forms of pyrometer are suitable.[1] A few of the more important may be briefly described.

Electrical Resistance Pyrometer.—The Callendar resistance pyrometer[2] contains a coil of platinum wire carefully insulated and protected from the furnace gases, and so arranged that its electrical resistance can be accurately measured. The resistivity of pure metals increases very regularly with the temperature, and accurate

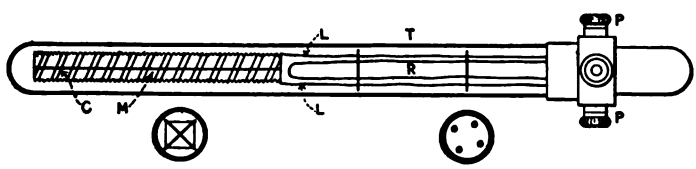

FIG. 58.—Electrical resistance pyrometer.

temperature measurements can be made in this manner up to 1,000° C, or 1,100° C. This pyrometer, as shown in Fig. 58, consists of a coil of fine platinum wire, *C*, wound on a framework of mica, *M*, and having leads of stouter platinum wire, *L*. The cool ends of these leads are attached to binding posts, *P*, from which copper wires lead to instruments for measuring the electrical resistance of the coil of platinum wire. The resistance measured includes that of the platinum leads, which will be partly in the furnace and partly outside. In order to avoid the inaccuracy resulting from this, duplicate leads, *R*, are provided, which are short-circuited at the hot

[1] High-temperature Measurements," by le Chatelier and Boudouard, trans. by C. K. Burgess.

Pyrometers suitable for Metallurgical Work. Journ. Iron and Steel Inst. i, 1904.

Methods of Pyrometry, C. L. Waidner, Proc. Eng. Soc. of Western Pa., 1904, p. 98.

Seger Cones, Hofman and Demond. Trans. Amer. Inst. of Mining Engineers, vol. xxiv, p. 42, and xxix, p. 682.

[2] Technical Thermometry, a pamphlet issued by the Cambridge Scientific Instrument Co., 1906.

Callendar, Phil. Mag., vol. xlvii, 1899, pp. 191 and 519.

Chappuis and Harker, Phil. Trans. Roy. Soc. A., vol. cxciv, 1900, pp. 37–134.

end, and the measuring instruments are arranged to show the difference of resistance between the coil of platinum wire with its leads, *L*, and the duplicate leads, *R*. This difference represents accurately the resistance of the platinum coil alone, and so indicates the temperature of the furnace. Mica is used to support the platinum wire coil and leads, as it remains an insulator at high temperatures. The whole is enclosed, for protection, in a tube, *T*, of porcelain or fused quartz.

Thermo-electric Pyrometer.[1]—This consists of two wires of different metals. These are fused or twisted together at one end, which is placed in the furnace, while the other ends of the wires are connected to a galvanometer or instrument for measuring a very small electric current. When the junction of the wires is heated, a small electric current is generated and in this way the temperature of the furnace can be measured. The indications of this instrument are somewhat less accurate than those of the platinum resistance pyrometer, but

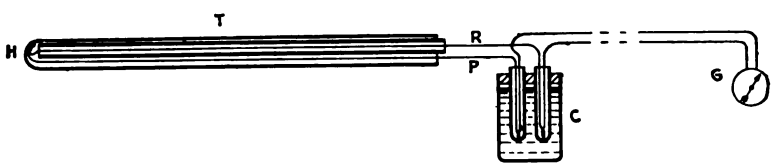

FIG. 59.—Thermo-electric pyrometer.

the thermo-couple can be used up to 1,700° C., and in many ways is more convenient than the resistance pyrometer. For very high temperatures the wires are composed of platinum and an alloy of platinum with rhodium or iridium, but for lower temperatures cheaper metals can be used.

The thermo-electric pyrometer shown in Fig. 59 consists of a wire of platinum, *P*, and a wire of platinum alloyed with 10 per cent. of rhodium or iridium, *R*. These wires are insulated from each other, and protected from the contents of the furnace by tubes of fused quartz, *T*, and their ends are twisted and fused together at *H*. The other end of each wire is soldered at *C* to a copper wire leading to a galvanometer, *G*. The junction *H* is placed in the furnace whose temperature is to be measured, and the junctions *C* are kept at a constant temperature by a stream of cold water. The deflection of

[1] Barus. Bull, U. S. Geol. Survey, No. 54, Washington, 1889.
Roberts-Austen, Trans. Amer. Inst. of Mining Engineers, 1893.
Stansfield, Phil. Mag., xlvi, 1898, p. 59.

the galvanometer depends on the difference of temperature between *H* and *C*. The pyrometer is calibrated empirically by noting the deflection produced at certain known temperatures, such as the melting-points of pure metals. The galvanometer must have a fairly high resistance, so as to render unimportant any small changes in the resistances of the wires *P* and *R* and other parts of the system. The action of the pyrometer depends on the change in thermo-electric force between the metals *P* and *R*, due to change of temperature; and for accurate work the galvanometer would be replaced by a potentiometer, or other instrument better adapted to the measurement of small electromotive forces.

This pyrometer is limited by the melting of the wire which takes place at about 1,750° C. For still higher temperatures the author has devised a thermo-electric pyrometer depending on the electromotive force between amorphous carbon and graphite. The difficulties of construction in these materials are considerable and they have been overcome, as shown in Fig. 60, by the use of a graphite tube

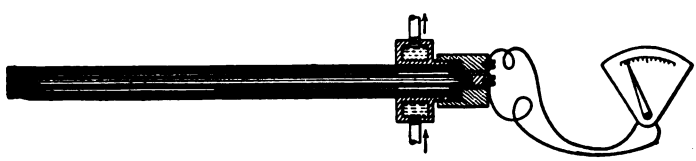

FIG. 60.—Graphite-carbon pyrometer.

closed at one end (obtained by boring a graphite electrode) and placing within this tube a rod of amorphous carbon, which makes contact only at the closed end of the tube. A water-cooled jacket is attached to the open end of the graphite tube and within this contact is made to the carbon rod by means of an insulated terminal.

This pyrometer can be used up to temperatures at which carbon is converted to graphite, that is to say nearly up to the temperature of the electric arc. It is especially suitable for use in furnaces that contain carbon and are free from oxidizing gases. In the presence of air it would be necessary to protect the graphite tube with an outer tube of some refractory material, such as carborundum or alundum, and this would, of course, limit the range of the pyrometer. In using this pyrometer it is essential that the cooler end, at which it connects to the copper wires leading to the measuring instrument, shall be kept very carefully at a constant temperature, as changes in this temperature affect the indication far more than equal changes in the

furnace temperature. The carbon rod is supported only at its cool end and at its point of contact with the graphite tube; thus avoiding the use of any insulating substance in that part of the pyrometer which is exposed to high temperature. This is essential as all substances become conductors, even if they do not fuse, at very high temperatures.

The author has not had the opportunity of making an extended study of this pyrometer, but the work already done indicates that it should have a considerable field of usefulness. Difficulty is met in obtaining samples of graphite and amorphous carbon having constant thermo-electric properties and it must be remembered that at electric-furnace temperatures, there will be danger of the gradual transformation of the carbon into graphite, and this will necessitate frequent recalibration of the pyrometer.

Pyrometers of the thermo-electric type can be made to record their indications by means of a moving photographic plate on which a ray of light falls from the mirror of the indicating galvanometer. There are also a number of commercial forms of recording pyrometers which produce an ink record of the temperature.

Optical or Radiation Pyrometers.—These depend on the measurement of the amount or the color of the light emitted by a heated substance, or of the amount of heat which is radiated. They can be used to measure the temperature of the hottest furnaces, as no part of the instrument need be inserted in the furnace. These pyrometers can be sighted on the heated contents of a furnace, through an opening in the wall, or on the closed inner end of a tube entering the furnace.

Optical pyrometers[1] are of several types. One form depends on the measurement of the color of the light emitted by the furnace, depending on the fact that the emitted light changes its color with the temperature.

The Mésure and Nouel pyrometer is of this kind having a pair of Nicol prisms and a quartz plate so arranged that a different reading is obtained for different colored light.

A number of pyrometers measure the brightness of the light, preferably the brightness of some particular colored light emitted by the furnace, red light, for example.

Of these may be mentioned the Cornu-le Chatelier pyrometer

[1] Optical Pyrometry, by C. W. Waidner and G. K. Burgess, Bull. No. 2, Bureau of Standards, Washington, 1905.

Radiation Pyrometry, G. A. Shook, Met. and Chem. Eng., x, 1912, p. 238.

which compares the brightness of the furnace with that of a standard oil lamp, varying the amount of light received from the furnace by means of an adjustable diaphragm until equality is obtained.

A recent modification of this is the Shore pyrometer.

The Morse pyrometer compares directly the brightness of the furnace with that of a carbon filament heated by an electric current. The amount of current required to produce equality of brightness is noted and this affords a measure of the temperature.

The Wanner pyrometer compares the brightness of the furnace with that of a standard electric lamp; the comparison between this and the furnace being effected by an elaborate optical system.

Another type of pyrometer measures the total intensity of the heat-radiation from the furnace; the heat being allowed to fall on a minute thermo-couple, in the pyrometer.

The best known of these pyrometers is the Féry pyrometer. This instrument is a telescope, see Fig. 61, having an objective lens

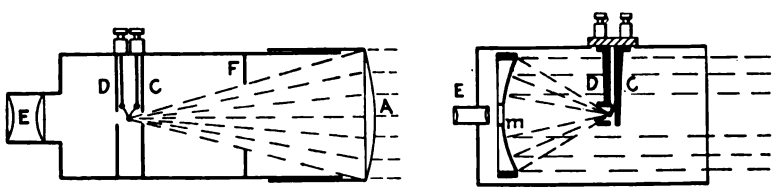

FIG. 61.—Féry radiation pyrometer.

A, preferably made of fluorite; or a mirror, *m*. The radiant heat is concentrated by the lens or mirror on the junction of a minute thermo-couple, which is connected to insulated binding screws, and from these to a galvanometer or millivoltmeter. The "cold-junction" of the thermo-couple is protected from the radiation by screens, and the difference of temperature between the hot and cold junctions, and hence the reading on the millivoltmeter, will depend on the amount of radiant heat falling on the hot-junction, and therefore on the temperature of the furnace. The thermo-couple is very small, so that there is scarcely any lag in its indications. The lens or mirror can be moved so as to form the image of the furnace on the thermo-couple with the aid of the eye-piece, *E*. The change in focus of the lens or mirror, depending on the distance between the instrument and the furnace, would introduce an error in the reading, but this error is avoided by the diaphragm *F* in the first figure and a corresponding diaphragm in the second figure.

Simpler forms of this pyrometer are the Thwing and the Foster's fixed focus pyrometer.

The gases and vapors present in electric furnaces introduce serious difficulties into the use of optical and radiation pyrometers. It is often impossible to keep an opening into the furnace for the observation of its temperature, and a closed tube is introduced as shown in Fig. 62; the pyrometer being sighted on the inner closed end, marked black in the figure. Even with this precaution the tube becomes obscured by vapors, and Gillett,[1] employed an inner tube, open at both ends, as shown in the figure, and withdrew the gases from the space between the tubes, thus leaving the inner tube clear for observation. The tubes can be made of carbon, carborun-

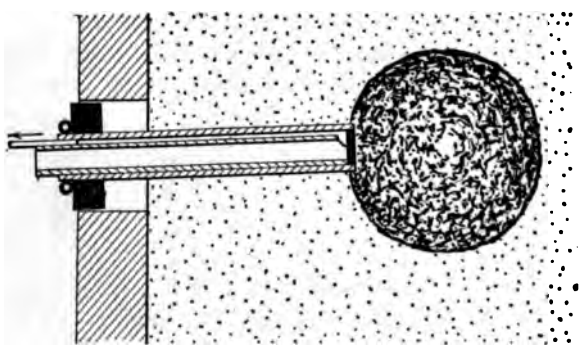

FIG. 62.—Gillett tube in carborundum furnace.

dum, or other material according to the nature of the furnace. In Fig. 62 the tube is used in measuring the temperature of the core of a carborundum furnace.

Other methods of measuring electric furnace temperatures consist in placing in the furnace a piece of carbon or of some other refractory material and noting at the end of the operation what change has taken place in the material used.[2] In the case of carbon the specific gravity increases with the temperature to which it has been exposed, but the change depends upon the time during which it has been heated as well as upon the highest temperature attained, and the indications of such a test are difficult to convert into degrees of temperature. In some cases the temperature of an electric fur-

[1] L. E. Saunders, "Temperature Measurements on the Silicon Carbide Furnace," Am. Electrochem. Soc., xxi, 1912, p. 425.

[2] F. A. J. FitzGerald, Trans. Amer. Electrochem. Soc., vol. vi, p. 31.

nace can be determined from the amount of electrical energy supplied to it. Thus Mr. W. C. Arsem, in working with a small vacuum electric furnace, observed how much power was needed to maintain the furnace at three lower temperatures, which could be measured, and then deduced by means of a curve the temperature that should be produced by any other amount of electric power.[1]

This section may be concluded by a table of temperatures published recently by G. K. Burgess, Sc. D.,[2] of the Bureau of Standards, Washington. The melting-point of aluminium has been added by the author.

TABLE XV.—SCALE OF TEMPERATURES

	Temperature	Possible error
Hydrogen boils	−252.7° C.	0.2° C.
Oxygen boils	−182.9° C.	0.1° C.
Mercury freezes	− 37.7° C.	0.1° C.
Water freezes	0.0° C.	0.0° C.
Water boils	100.0° C.	0.0° C.
Tin melts	231.85° C.	0.1° C.
Cadmium melts	320.9° C.	0.1° C.
Lead melts	327.4° C.	0.1° C.
Zinc melts	419.4° C.	0.1° C.
Sulphur boils	444.6° C.	0.1° C.
Antimony melts	630.0° C.	0.5° C.
Aluminium melts	657.0° C.	?
Sodium chloride melts	800.0° C.	2.0° C.
Silver melts	960.5° C.	1.0° C.
Gold melts	1,063.0° C.	2.0° C.
Copper melts	1,083.0° C.	2.0° C.
Palladium melts	1,549.0° C.	10.0° C.
Platinum melts	1,755.0° C.	15.0° C.
Alumina melts	2,000.0° C.	30.0° C.
Tungsten melts	3,000.0° C.	100.0° C.
Surface of carbon arc	3,600.0° C.	150.0° C.
Surface of sun	6,000.0° C.	500.0° C.

[1] W. C. Arsem, The Electric Vacuum Furnace. Trans. Amer. Electrochem. Soc., vol. ix, p. 153.

[2] G. K. Burgess, Met. and Chem. Eng. x, 1912, p. 692.

CHAPTER VI

LABORATORY FURNACES

In industrial operations the use of the electric furnace is limited by the matter of cost—electrical heating cannot be employed industrially for many purposes for which it would be suitable, because the cost would be too great. For experimental work in the laboratory, however, the item of cost is far less serious and the electrical furnace has a correspondingly wider range of uses.

Electric furnaces employed in the laboratory may be considered under the following heads:

(1) Furnaces suitable for making tests, such as the determination of the melting- and boiling-points of substances, the thermal and electrical conductivity of substances, and changes in volume and other physical properties under the influence of heat; such furnaces may also be employed for studying chemical reactions such as the reduction of oxides at high temperatures.

(2) Furnaces for testing electrical smelting processes, such as the smelting of iron ores, the smelting of zinc ores, or the manufacture of steel.

In discussing laboratory furnaces it is desirable to bear in mind the essential differences between these groups of furnaces. Furnaces in group (1) will be considered first; and it will be noticed that most of them are either crucible furnaces or tube furnaces.

TESTING FURNACES

For experimental purposes both arc-furnaces and resistance furnaces may be used. The arc enables a very high temperature to be attained in a small furnace, but resistance furnaces are preferable when a uniform and easily regulated temperature is desired.

Arc-Furnaces

As examples of these may be mentioned the Moissan furnace, Fig. 6, and the Siemens furnace, Fig. 2.

A convenient form of arc-furnace for laboratory use is shown in

Fig. 63 which is modified from the furnace of Poulenc and Meslans.[1] The arc is direct heating, the carbon crucible containing the charge resting upon the lower electrode. The furnace is closed for the retention of heat and the exclusion of air, and can be opened very easily by means of a lever. The furnace is lined with fire-bricks and has an inner, more refractory lining of magnesite or similar material.

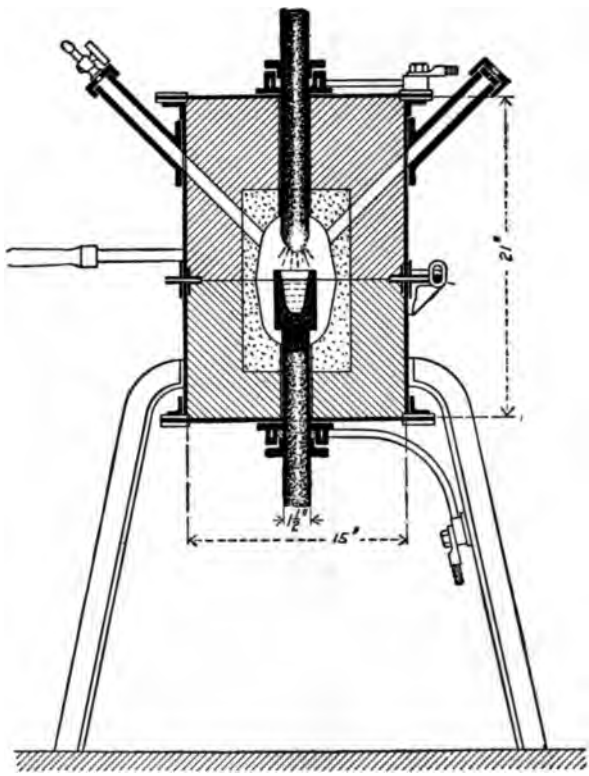

FIG. 63.—Laboratory arc furnace.

Water-cooled stuffing-box electrode holders are employed, and the furnace is supported on legs. The progress of the operation can be observed through an opening provided with a window, and a neutral gas introduced through a pipe terminated with a stop-cock. The electric cables are led to insulated terminals on the frame of the furnace, and connection from these to the electrode holders is made by heavy copper pipe which also carries the cooling water.

[1] Borchers' electric furnaces, p. 117.

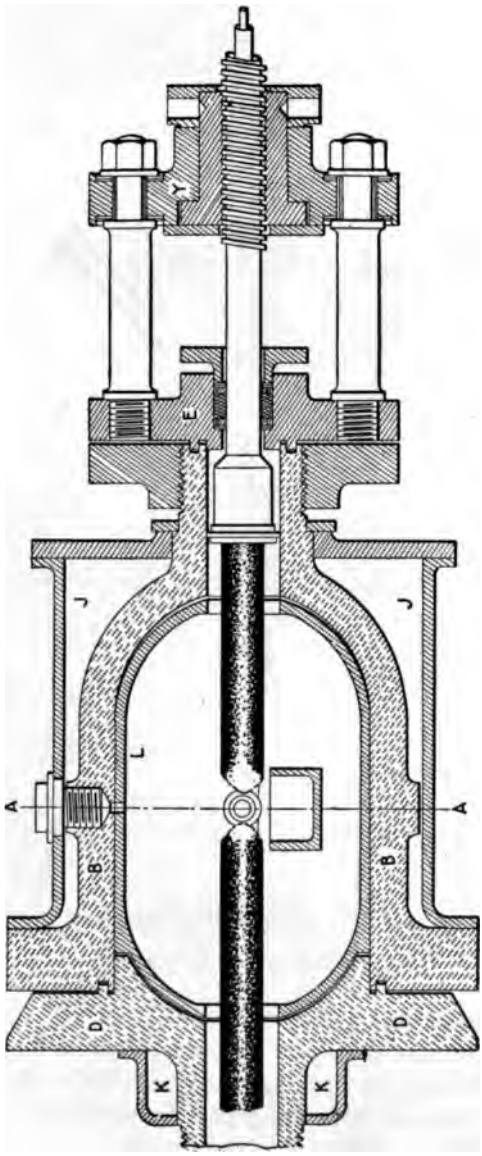

FIG. 64.—Hutton pressure furnace.

The Hutton pressure furnace[1] was employed by Dr. R. S. Hutton and Mr. J. E. Petavel for the purpose of investigating the behavior of substances at high temperatures and under great pressure. The pressures to be studied were as high as 200 atmospheres, and the furnace has been very carefully designed to remain gas-tight under these high pressures. The furnace, which is shown in Fig. 64, consists of a steel vessel *B* and lid *D* forming a cylindrical chamber 17 in. long and 10 in. in diameter having hemispherical ends. The cover *D* is held in

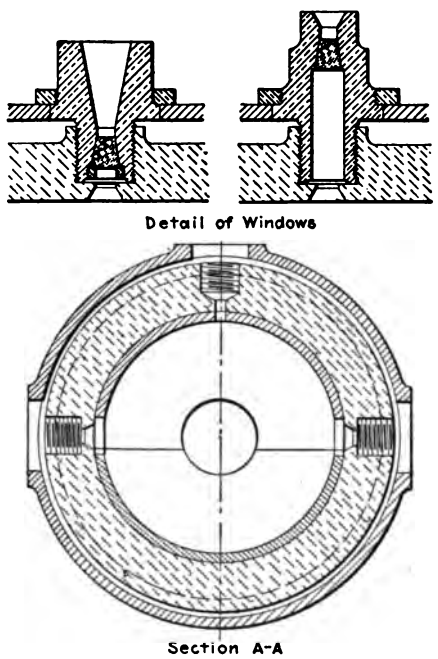

FIG. 64 A.—Hutton pressure furnace.

position by a number of studs not shown in the figure. The furnace has an inner lining *L* of cast-iron to protect the steel shell. The electrodes are held in metal holders which pass through stuffing-boxes in the ends of the furnace; the electrode holders being operated by means of a screw mechanism, to support them against the high pressure tending to force them outward. Openings in the furnace serve to admit or remove gases, and for observing the operation through stout glass windows. The shell of the furnace is surrounded with a

[1] Dr. R. S. Hutton, Electrochem. and Metall. Ind., vol. vi (1908), p. 97; Phil. Trans. Roy. Soc., series A, vol. ccvii, 1908, p. 421.

water-jacket *J*, the cover has a water-jacket *K*, and the electrode holders are also water-cooled. The furnace can be provided with a refractory lining within the cast-iron liner *L*, and can be used as an arc or a resistance furnace. The electrode holders are hollow (for water cooling), and also contain a small tube for the introduction of a gas, through a hollow electrode, to the center of the furnace. The yoke *Y*, which advances the electrode holder, is insulated from the furnace and is connected to the electrical supply.

The furnace cover *D* and end caps *E* make gas-tight joints with the furnace body with the aid of lead packing-rings. The electrode holder enters through an insulating packing, and an insulating ring on the holder screens this packing from the heat of the furnace. The furnace can be used in the horizontal position or vertically.

Resistance Furnaces

This very important class of laboratory furnaces may be considered for convenience under the following heads:

(1) **Furnaces with Metallic Heating Coils.**—A furnace in this class consists essentially of a tube or crucible wound with a heating coil of platinum or other metal. A tube furnace with a platinum coil, shown diagrammatically in Fig. 13, consists of a tube of porcelain, fire-clay, silica, or alundum, having a spiral heating coil wound round it, and the whole jacketed to reduce the loss of heat. These furnaces are very convenient for many purposes for which moderate temperatures will suffice. They cannot be heated to the melting-point of platinum, and they are also limited by the fusibility of the material used for the tube. A thermo-couple pyrometer can be inserted from one end, and the progress of the operation can be observed from the other end. This form of furnace is convenient when it is desired to have a stream of gas flowing through the furnace. A strip of platinum foil is sometimes used instead of platinum wire as, on account of its larger radiating surface, a greater rate of heating can be obtained with the same weight of platinum. Heating coils of nickel, nichrome and other metals and alloys are often used on account of their smaller cost. They cannot be used at as high a temperature as the platinum coils, and become oxidized in time. Sometimes a crucible is used instead of a tube, as in the crucible furnace designed by Prof. Howe.[1] This furnace, Fig 65, is made of magnesia, shaped to receive the crucible *C* and

[1] Howe Laboratory Notes, 1902, p. 37.

having a special groove to retain the platinum heating coil. A thermo-couple pyrometer *P* is inserted through the cover, and a stream of gas can be supplied through the pipe *H*.

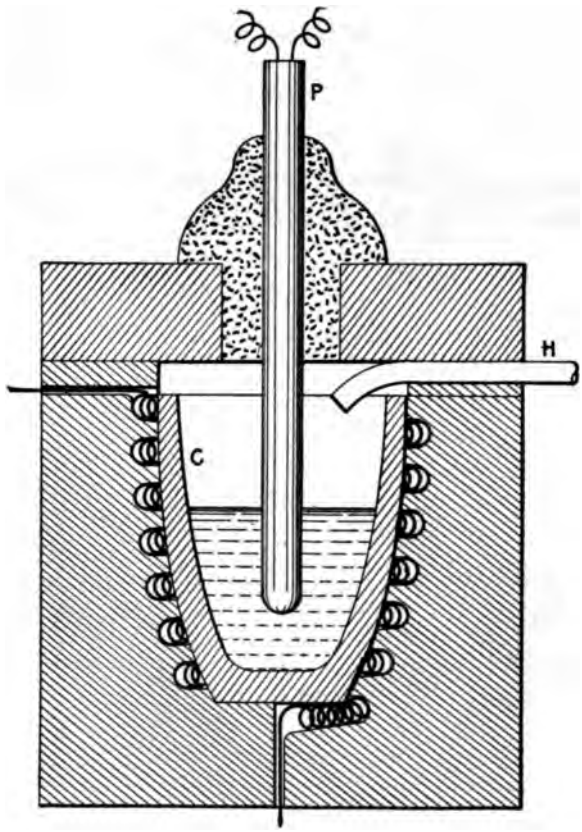

FIG. 65.—Howe's crucible furnace.

(2) **Furnaces with Carbon Resistors.**—This class includes tube, crucible and muffle furnaces having an external carbon resistor for the production of heat. Furnaces having a carbon tube which itself forms the resistor are considered in the next class, as resistor tube furnaces. The following examples may be given:

The Lampen Tube Furnace.—This furnace, described by A. Lampen,[1] consists of a graphite tube *T T*, Fig 66, heated by a resistor

[1] A. Lampen, "An Electrical Resistance Furnace for the Measurement of Higher Temperatures with the Optical Pyrometer," Jour. Am. Chem. Soc., xxviii, 1906, p. 846.

of broken carbon, *RR*, which extends between carbon electrodes *E E;* the electric current passing at right angles to the axis of the tube. The tube is provided with windows, not shown in the figure, to exclude the air and to permit the interior to be observed.

The resistor and the graphite tube are jacketed with some heat-retaining substance *C C*, such as charcoal powder, and the ends of the electrodes are surrounded with broken coke or carbon. The

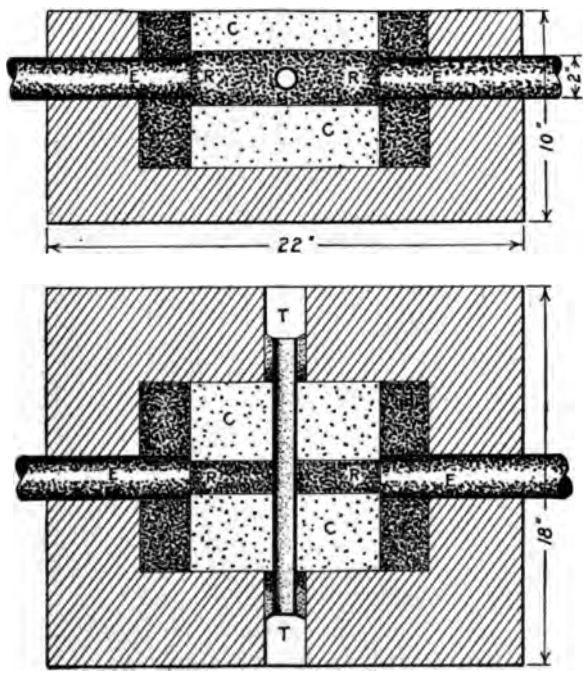

FIG. 66.—Tucker and Lampen tube furnace.

furnace is built of fire-bricks and is provided with a cover (not shown) to prevent admission of air and to reduce the loss of heat.

The furnace can be used for measuring the temperature at which substances melt, or at which chemical reactions take place; the temperature being determined by means of an optical pyrometer sighted along the tube.

Fig. 66 actually represents a modification of Lampen's furnace employed by Tucker and Lampen[1] for determining the temperatures

[1] S. A. Tucker and A. Lampen, "The Measurement of Temperature in the Formation of Carborundum," Jour. Am. Chem. Soc., xxviii, 1906, p. 853; L. E. Saunders, Trans. Am. Electrochem. Soc., xxi, 1912, p. 426.

of formation and decomposition of carborundum. The filling *C* being the mixture of sand and carbon which is converted into carborundum by heat produced in the resistor *R R*. A piece of graphite is placed in the tube *T T*, and by observing this with an optical pyrometer, the temperatures at different parts of the furnace can be ascertained.

Crucible Furnaces.—One of these is shown in Fig. 14, and another which was used in the author's laboratory for testing the electrical resistivity of fire-bricks is shown in Fig. 34. In the latter the crucible was of graphite and clay, and temperatures up to 1600° C. could conveniently be obtained. In furnaces of this class, kryptol (see page 291) is often used instead of carbon or graphite for the resistor. A furnace having ring-shaped electrodes is shown in Fig. 67. The ring-shaped electrodes cause a more even heating of the crucible than would be obtained in the other furnaces.

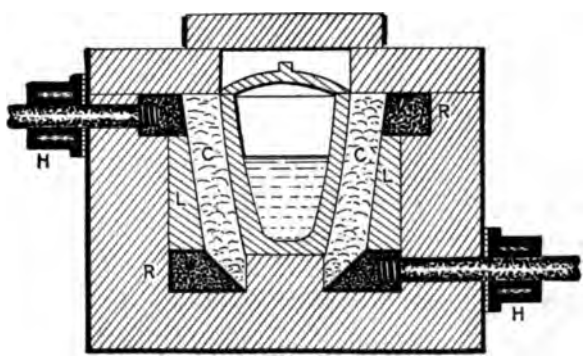

FIG. 67.—Crucible furnace.

In all these furnaces the temperature that can be obtained depends upon the melting-point of the crucible or tube. Carbon itself is quite infusible, but sometimes carbon is inadmissible and then the tube or crucible may be made of carborundum for very high temperatures, while quartz, alundum or fire-clay may be used for lower temperatures. It should be remembered that the oxides forming the refractory envelope are liable to be reduced to metals by the carbon resistor at high temperatures

In the figure, *R R* are the ring-shaped electrodes which are supplied with current from the water-cooled electrode holders *H H*. The granular carbon, which forms the resistor, is shown at *CC* surround-

ing the crucible. The furnace is constructed of fire-clay within an iron casing, but a lining *L L* of particularly refractory material, such as magnesia or carborundum, is placed between the carbon rings and surrounds the resistor. The furnace is designed so that the broken carbon can be filled in around the crucible. The crucible itself should be a non-conductor, as otherwise it will carry the current, thus short-circuiting part of the resistor.

Arsem Vacuum-furnace.—A very carefully designed furnace for operating in a vacuum was described by W. C. Arsem[1] in the year 1906, and is shown in Fig. 68.[2] A gun-metal chamber, *A*, which can be rendered vacuous by means of a pump, contains the furnace proper. This consists of a heater *L* which is a spiral of graphite, within which a crucible *Y* can be supported; a radiation screen *O*, made of graphite and filled with powdered graphite, serves to minimize the loss of heat by radiation. Electrical connection is made to the ends of the graphite spiral by means of copper clamps *U* which are water-cooled; the pipes conveying the cooling water serve also to carry the electric current to the clamps. A window *E* of mica enables the operation to be observed. Considering the construction of this furnace it may appear at first that the radiation screen *O* might have been better designed for retaining the heat, but it should be remembered that when operating in a vacuum there is not the loss of heat which occurs in ordinary furnaces due to the circulation of heated air; moreover, the small mass of the radiation screen allows the furnace to arrive very rapidly at its final temperature, and this enables the temperature of the furnace to be determined quite accurately from an observation of the power supply. The furnace is calibrated by melting in it metals of varying fusibility and the current required to melt each metal is ascertained. A calibration curve can then be drawn giving the relation between current and temperature, and this curve is of such a nature that temperatures up to nearly 3,000° C. can be determined with a probable error of only 50° C. The furnace can be used for a considerable time at temperatures up to about 2,000° C., but at higher temperatures the graphite of the spiral volatilizes and wastes away until a break occurs. The furnace was found to run for about nine hours at 2,500° C., and for only one hour at 3,000° C. The whole furnace is placed in a metal chamber *R*

[1] W. C. Arsem, "The Electric Vacuum Furnace," Am. Electrochem. Soc., ix (1906), p. 153.

[2] Reproduced from Mr. Arsem's paper.

which is filled with water for the purpose of keeping the vessel *A* from becoming heated.

The Arsem vacuum furnace is made in several forms by the General Electric Company, Schenectady.[1] The form described is

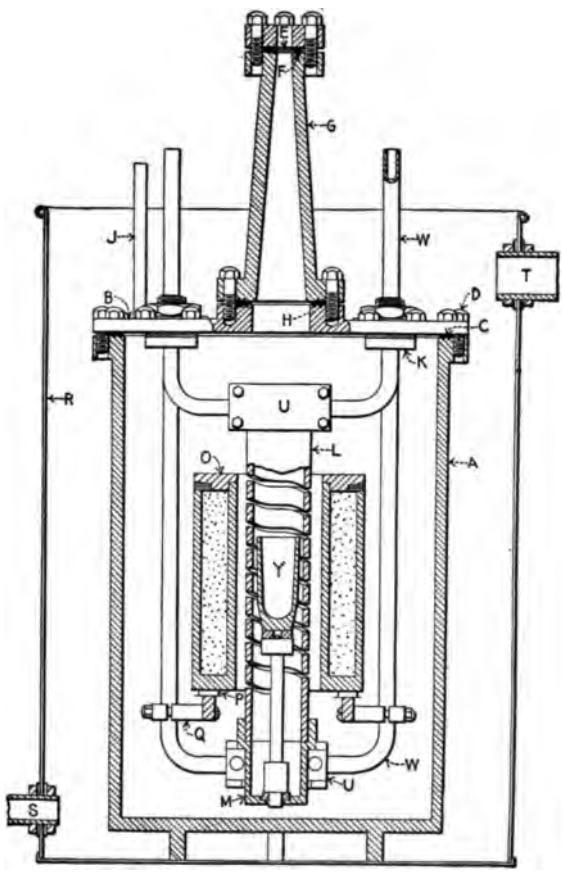

FIG. 68.—Arsem vacuum furnace.

21 in. high and 15 in. in diameter, and contains a crucible 1.5 in. in diameter and 4 in. high. It takes 15 kw. (250 amperes at 60 volts), and attains a temperature of 3,100° C. A larger furnace is made holding a crucible 10 in. high and 4 in. diameter, and using 60 kw. A tube furnace and box-type furnace are also made.

[1] General Electric Company, Bull. 4898 A, April, 1912.

(3) **Resistor Tube Furnaces.**—A furnace in this class consists of a conducting tube, suitably jacketed, with provision for passing an electric current along the tube to heat it. The tube is usually made of carbon or graphite, but sometimes other conducting materials are used, such as the Nernst earths which become conductors when heated. A furnace having a tube of graphite or carbon has been described by Hutton.[1]

Fig. 69 shows a resistor tube furnace similar in principle to that of

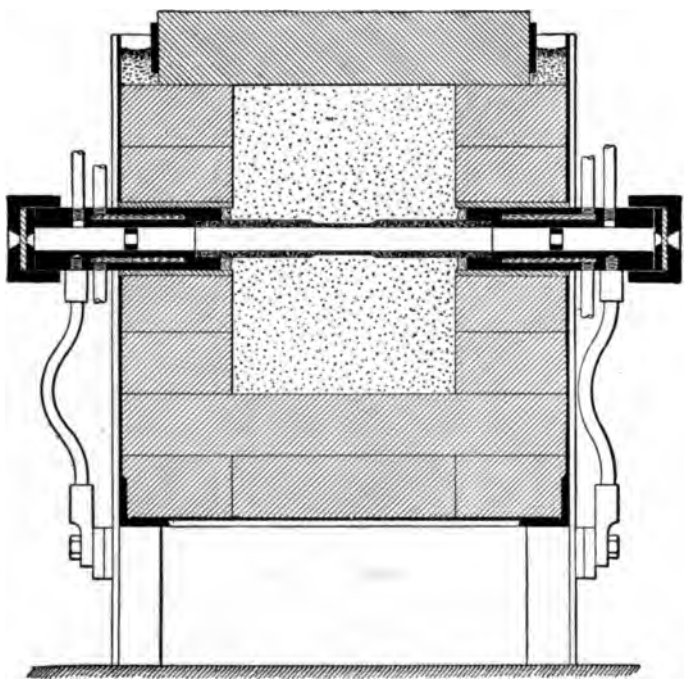

FIG. 69.—Resistor tube furnace.

Hutton. It consists of an iron case supported on legs and lined with fire-bricks. The carbon tube passing through the furnace has its ends coppered and is soft-soldered into water-cooled copper holders. The holders are provided with windows, and a neutral gas, such as hydrogen, can be passed through the carbon tube. Electrical connection is made from the holders by flexible cables to insulated terminals on the framework of the furnace. A large current

[1] R. S. Hutton and W. H. Patterson, Trans. Faraday Soc., i, 1905, p. 187; Electrochem. and Metall. Ind., iii, 1905, p. 455.

at a low voltage will usually be needed for heating the tube, and if necessary the middle part of the tube can be made somewhat thinner so as to increase its electrical resistance. The tube is jacketed and protected from oxidation by a powdery material such as amorphous carborundum which fills the body of the furnace.

Harker Laboratory Furnace.[1]—This furnace, Fig. 70, consists of a tube, *T*, composed of earths like those used in the Nernst filament; these earths are non-conducting when cold but become conductors when heated to a red heat. The current is supplied to the ends of this tube by means of platinum conductors, *P P*, and the tube itself

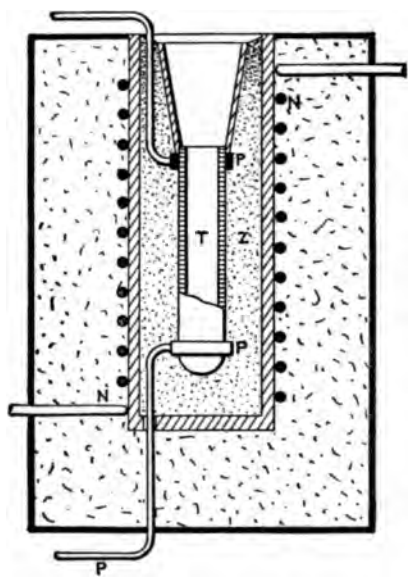

FIG. 70. Harker tube furnace.

is jacketed with zirconia powder, *Z*. An outer heating coil of nickel, *N N*, is used to heat the tube to the temperature at which it becomes conducting, and also to supply auxiliary heat; thus enabling the tube to be used with a smaller current. The nickel coil is wound around a fire-clay tube, and the whole is suitably jacketed. This furnace can be used up to about 2,200° C., and as this temperature is above the melting-point of the platinum conductors it should be noted that only the part of the tube remote from the conductors will attain this temperature.

[1] J. A. Harker, Electrochem. and Metall. Ind., vol. iii (1905), p. 273.

SMELTING FURNACES

The furnaces already described for carrying out certain tests and other regular laboratory operations tend to conform to certain definite types and one may hope that they will become standardized, but for testing electric smelting processes it is necessary that the laboratory furnace should follow somewhat closely the design of the commercial furnace whose operations are to be imitated. Examples will be given of small-scale furnaces for the production of pig-iron, steel, zinc, etc.

Héroult Steel Furnace.—A small furnace of this type constructed by C. A. Hansen[1] is shown diagrammatically in Fig. 71. It consists

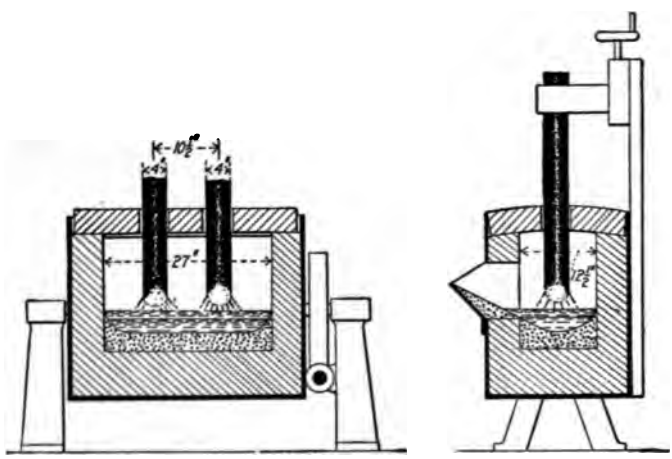

FIG. 71.—Hansen steel furnace.

of an iron box mounted on trunnions, and provided with mechanism for tilting. The furnace is lined with 4 1/2 in. of magnesite bricks, for the walls, and with about 8 in. of brickwork and some rammed magnesite for the bottom. The roof is an arch of silica brick. The electrodes are of graphite, and are supported by holders having a screw adjustment.

The power used was about 80 kw. (1000 amperes at 84 volts) and the charge of steel melted varied from 50 lb. to 300 lb. A charge of 150 lb. of sheet scrap can be melted in a cold furnace with about 70 kw.-hours. The furnace can be kept hot with 50 kw. and

[1] C. A. Hansen, "Small Experimental Héroult Furnace," Electrochem. and Met. Ind., vii, 1909, p. 206.

with 300 lb. charges the power consumption averaged about 150 kw.-hours per heat, or 1,000 kw.-hours per ton.

A tilting arc-furnace of the Héroult type, which has been built in the author's laboratory, is shown in Fig. 72. This has been built, for greater flexibility of use, with the vertical electrodes of the Héroult furnace and also with the nearly horizontal electrodes of the Stassano furnace. It consists of a steel plate box on rockers, resting on a carriage, so that the whole furnace can be moved about, and is provided with a spout, working door and electrode holders. The electrode holders are water-cooled brass stuffing-boxes with metallic packing, which admit the graphite electrodes and make electrical contact with them as well as cooling them and preserving

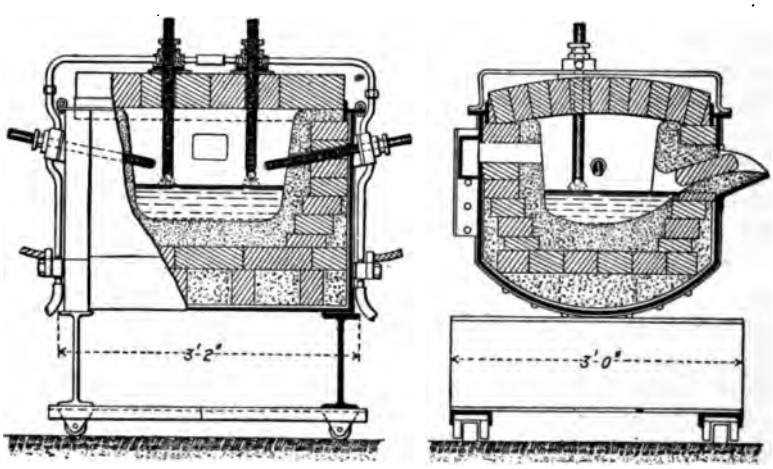

FIG. 72.—Steel furnace at McGill.

a gas-tight joint. The electrical supply is led to the pair of electrode holders at each end of the furnace by means of a heavy copper pipe which also supplies the cooling water. Rubber connections for the water are made between the holders at one end and those at the other end of the furnace.

The lining of the furnace has been very carefully designed to retain the heat as far as possible. Beginning with a lining of sheet asbestos, the bottom of the furnace has a few rows of bricks on edge; the spaces between the rows being filled with kieselguhr. On the top of these bricks is a course of bricks laid flat and a rammed lining of burnt magnesite and tar comes above this. The sides of the furnace are lined with a 4.5-in. course of fire-bricks, with

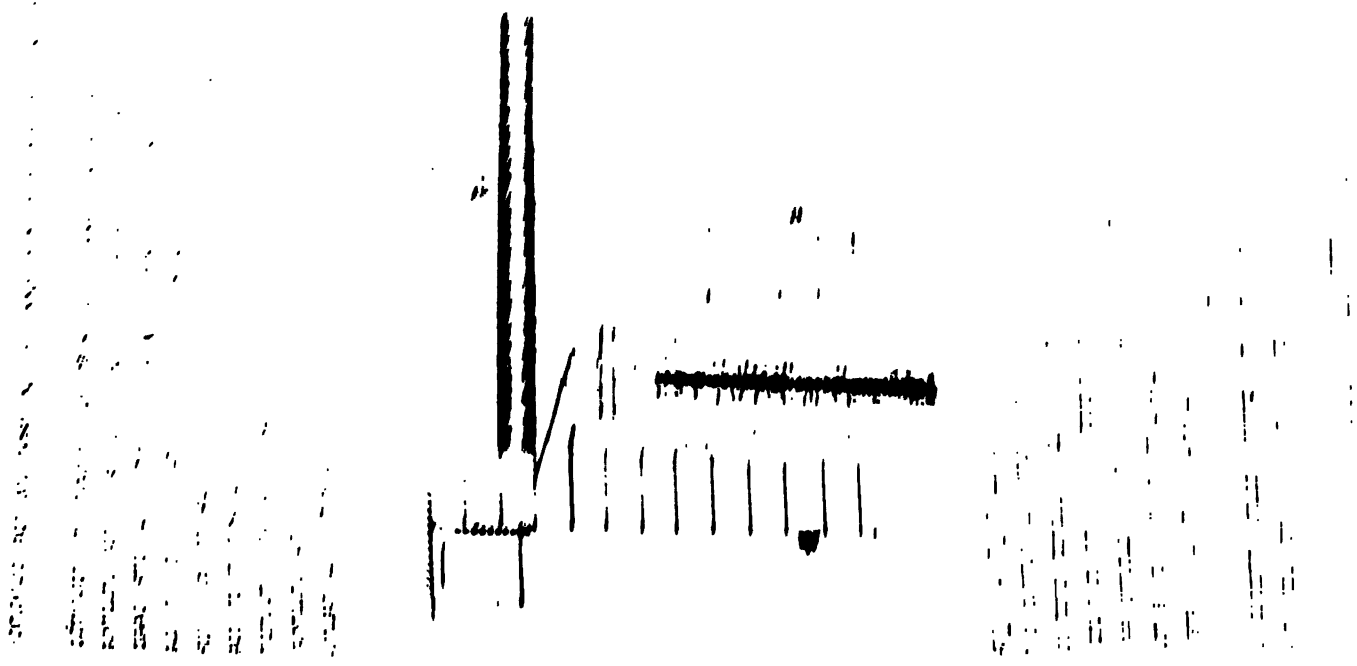

tion of ferro-silicon and similar products. For making calcium carbide, alundum, or silicon, a simple pit furnace can be used, with two or more vertical electrodes as shown in Fig. 75. The furnace

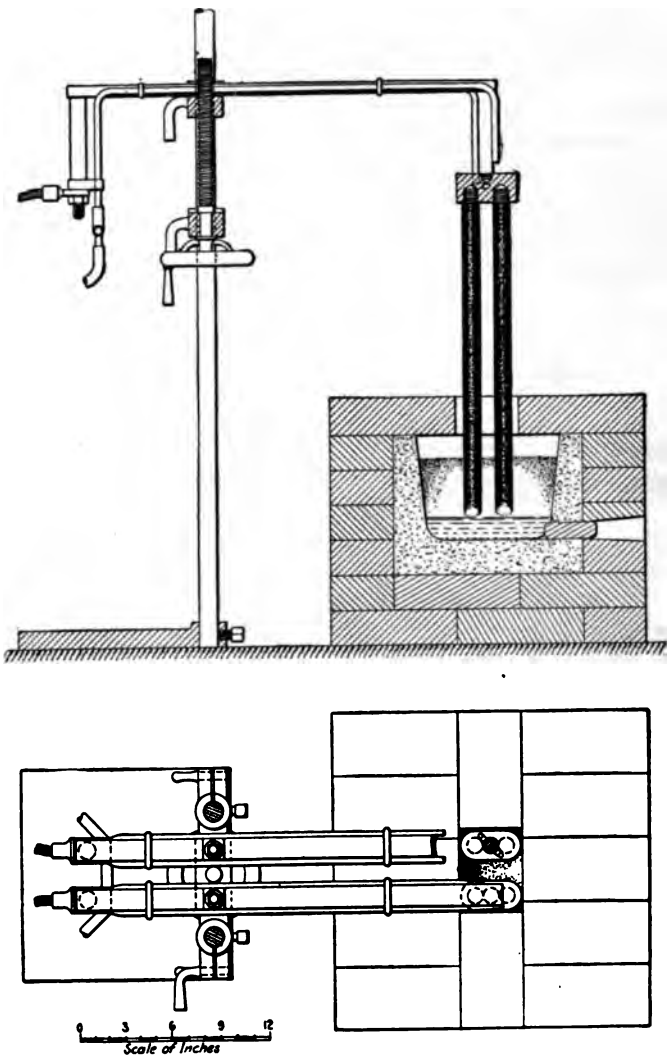

FIG. 75.—Adjustable electrode-holder and furnace.

is built of fire-brick and needs no rammed lining, though one is shown in the figure, as the materials of the charge form the working lining.

placed in the crucible (the upper limb of the core being removable for this purpose) and when this has melted, further additions of iron or steel can be made as desired.

Pig-iron Furnace.—The reduction of iron-ore to pig-iron is easily demonstrated in a furnace built of fire-bricks about 9 in. square inside with a 4.5-in. wall, as shown in Fig. 74. A graphite electrode, *A*, is built into the furnace, and a lining of coke and tar is rammed around this and continued upward to form a working lining for the lower part of the furnace. The upper conductor consists of a graphite electrode, *B*, supported by the holder shown in Fig. 75. The

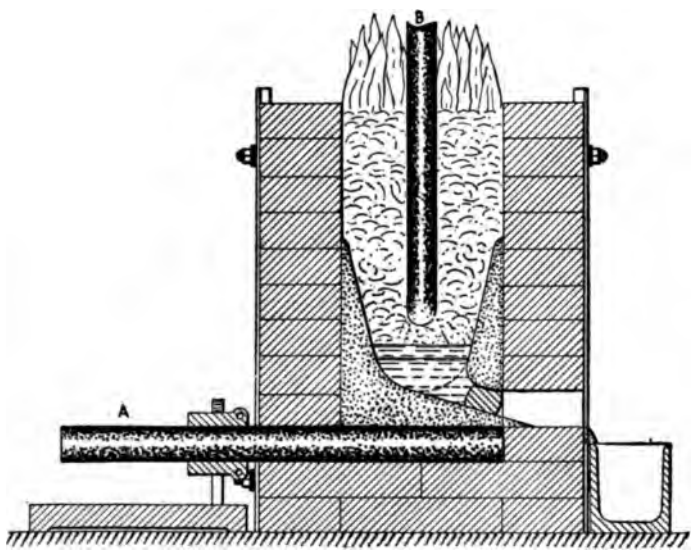

FIG. 74.—Iron-smelting furnace.

furnace is dried out and the lining baked by passing a moderate current for some hours through a little broken coke in the furnace. The charge, consisting of ore, charcoal and limestone is fed in around the upper electrode, and the current gradually increased until the furnace is in regular operation; 400 or 500 amperes at 50 volts are suitable for a furnace of this size, and a charge of 20 lb. of ore can be smelted in about an hour. When enough ore has been charged the smelting is continued until the contents of the furnace are melted, and the molten metal and slag are tapped out through the tapping hole.

A furnace like the one just described can be used for the produc-

tion of ferro-silicon and similar products. For making calcium carbide, alundum, or silicon, a simple pit furnace can be used, with two or more vertical electrodes as shown in Fig. 75. The furnace

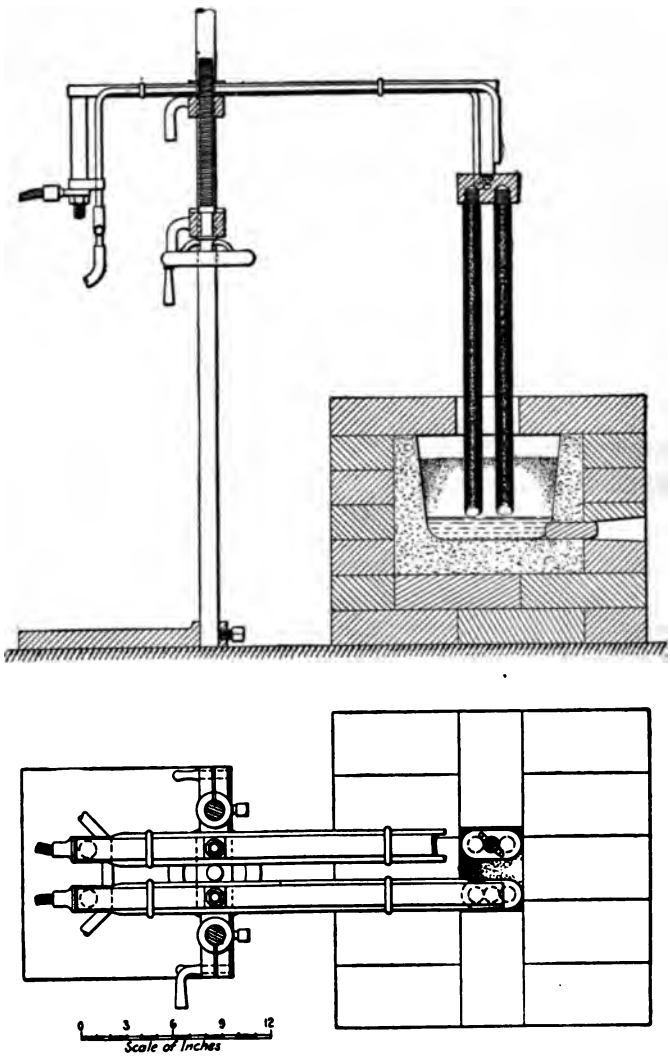

FIG. 75.—Adjustable electrode-holder and furnace.

is built of fire-brick and needs no rammed lining, though one is shown in the figure, as the materials of the charge form the working lining.

For furnaces of the type in which calcium carbide or ferro-alloys are made, a special electrode holder, Fig. 75, has been constructed which is very generally useful. This consists of a tall steel frame on which slides vertically a pair of blocks connected together by a long screw, one of these blocks can be clamped to the standards, and the other block, which carries a pair of arms, moves up and down by means of the screw, the arms carry at one end terminals for the electric cables of the supply and at the other end gun-metal electrode holders into each of which are threaded either one or two electrodes. The electrode holders are water-cooled; the water for this purpose passing in and out through hydraulic copper pipes, which also help to carry the electric current from the cables to the electrode holders.

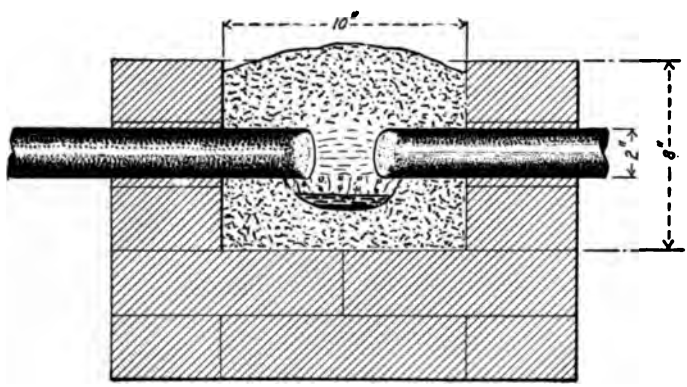

FIG. 76.—Silicon furnace.

The furnaces for use with this apparatus are usually built up as required from a few fire-bricks, the lining being a part of the charge itself as in the carbide furnace, or a rammed lining of magnesite and tar, or coke and tar, may be employed. The production of pig-iron from the ore is carried out with this apparatus.

Silicon can be made in the laboratory as has been shown by Prof. S. A. Tucker,[1] by means of an electric arc in the midst of a charge of sea-sand and coke well mixed and crushed to pass through a ten-mesh sieve.

A rectangular brick furnace 10 in. × 9 in. × 8 in. high inside is used with a pair of 2-in. graphite electrodes as shown in Fig. 76.

[1] S. A. Tucker, "The Preparation of Silicon in the Laboratory," Met. and Chem. Eng., viii, 1910, p. 19.

Silicon is reduced from silica by carbon according to the reaction:

$$\left.\begin{array}{c} SiO_2+2C=Si+2CO \\ (28+32)+2\times 12=28+2(12+16) \\ 60+24=28+56 \end{array}\right\}\text{Parts by weight.}$$

This shows that 5 parts of silica would need 2 parts of carbon for its reduction. Prof. Tucker employs an excess of silica, using 77 parts of silica with 25 parts of coke. This excess of silica is intended to combine with the carbon from the electrodes, which inevitably takes part in the reaction, so that the silicon shall not be carbonized.

For a furnace of the size indicated he uses a charge of 12 kilos (26 lb.) of the mixture, and a current of about 500 amperes at 50 volts for one and a quarter hours. Only about one-quarter of the charge is reduced, forming about 200 grm. (7 oz.) of silicon; the remainder of the charge serving as the working lining and cover of the furnace. The silicon runs down through the charge to the bottom of the furnace and thus escapes from the region of the arc. This is essential as otherwise it would volatilize and be lost.

Silicon can also be made in a pit furnace using two vertical depending electrodes. The charge may be made up of sand or crushed quartz, briquetted with pitch and coal or coke, and used in coarse grains which allow the gas to escape more easily.

The Acheson carborundum and graphite furnaces can be built on a small scale using a pair of horizontal 2-in. graphite electrodes in the holders shown in Fig. 45. The electrode holders for this furnace are, at each end, a pair of water-cooled half collars of brass which are supported and clamped together by two threaded standards. In operating this furnace, information can be gained as to the amount of heat carried to the electrode holders, as this is all removed in the cooling water and can be measured. For these operations a large current at a low voltage is suitable, 1,000 or 1,200 amperes at 25 volts being sometimes used in a small furnace. Carborundum has been made in this way, using a core of broken carbon having grains between 1/4 in. and 1/8 in. in size. The core was 4 in. square in cross-section, and the electrodes were 6 in. apart; their ends being surrounded by the core. A constant power of 15 kw. was supplied during 12 hours; the voltage being 55 to begin with and dropping to 30 when the furnace was thoroughly hot. The product included about 2 lb. of crystallized carborundum and a small amount of graphite, resulting from the decomposition

of the inner layer of carborundum. The author has devoted a great deal of time to experiments on the production of zinc from its ore in small electric furnaces; some of which are described in Chapter XII.

All the furnaces described in this chapter are operated by alternating current. Operations involving electrolysis such as the formation of sodium or aluminium require direct current and are considered in Chapter XIV.

Power for Electric Furnaces at McGill.—Since coming to McGill University in 1901, the author has devoted considerable attention to electric-furnace work and has made many experiments with electric furnaces in the laboratory. Until recently, the power for this purpose was taken from the 110-volt direct-current supply; not more than 200 amperes could be used, and whenever furnaces were run at low voltages the use of this power was very wasteful. In 1909 a new power-house was erected, supplying direct current at 220 volts for power throughout the University, and this would have been even less suitable for direct use in electric furnaces.

Dr. Milton Hersey of Montreal, an old McGill graduate, generously subscribed a considerable sum of money to the Metallurgical Department, a part of which has been devoted to the purchase of a motor-generator set, transformer and electrical measuring instruments for electric smelting. It was originally intended to have alternating and direct current at variable voltages, but it was found to be difficult to obtain both from the same generator and it was decided to provide for alternating current alone in the first instance.

The installation (see Fig. 77) consists of a 50-h.p. 220-volt direct-current motor having a 30-kw. 220-volt alternating-current generator on the same shaft. The generator supplies the high-tension windings of a transformer, the secondary low-tension windings of which are in four separate parts. The terminals from the secondary windings are brought to a set of mercury cups, by means of which they can easily be grouped in series, parallel or multiple series; thus obtaining the current at voltages of 110, 55 and 27.5 volts. The field of the generator has a regulating rheostat by means of which the generator voltage can be altered within wide limits, so that one has a perfect control of the voltage supplied to the furnace. The generator is three-phase, but until recently only one phase was used and this supplied the full 30 kw. at which the generator is rated. An additional transformer has now been provided for supplying furnaces with two-phase or three-phase current. The gener-

ator has been built for 25 cycles as this is more generally suitable for electric furnaces than a higher frequency.

A complete set of measuring instruments has been provided enabling the current, voltage and power supplied to any furnace to be easily and accurately measured. The amount of current

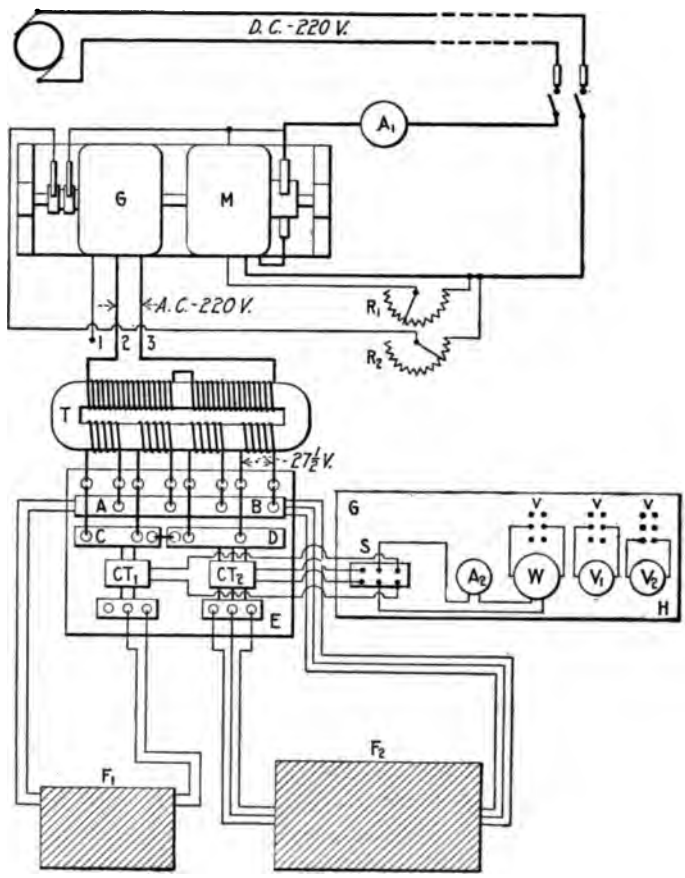

FIG. 77.—Furnace connections in McGill laboratory.

available from the transformer is 250 amperes at 110 volts, 500 amperes at 55 volts or 1,000 amperes at 27 1/2 volts, but decidedly larger currents can be used for short periods without endangering the apparatus. The motor-generator, both on account of its inertia and of its "regulation" causes the draft of power from the supply to be far less irregular than if the furnaces were connected directly

to the line. The line supplying the motor-generator is protected by a magnetic circuit breaker which is usually set for 250 amperes. A simple automatic regulator is also provided, which consists of a rheostat and a magnetic circuit breaker. The breaker is actuated by the current supplying the motor but instead of breaking this circuit it puts an additional resistance in series with the generator field; thus lowering the voltage of the generator. This breaker is arranged to come into action when the main current exceeds about 200 amperes. When this occurs the field rheostat is adjusted by hand and the breaker closed again.

The installation is shown diagrammatically in Fig. 77. *M* is the 50-hp. motor, connected to the 220-volt direct-current supply, with the field rheostat R_1 which serves to control the speed. The starting switches and breakers are not shown in the diagram. *G* is the three-phase alternating-current generator on the same shaft as the motor. The revolving field is supplied with current from the 220-volt direct-current line through the rheostat R_2 which serves to regulate the voltage of the generator. The high-tension winding of the transformer *T* is connected to two of the leads 1, 2, 3, from the generator. The eight terminals of the secondary windings are bolted to mercury cups on the table *E*, and these are coupled as required to the two omnibus-bars *A B* and *C D*. The bar *AB* has terminals beneath it for bolting on the return cables from the furnaces. Connections from *C D* pass through the current transformers $C\ T_1$ and $C\ T_2$ to a pair of terminal bars from which cables are carried to the furnaces. $C\ T_1$ has a ratio of 600 to 5 and serves for currents under 600 amperes, while $C\ T_2$ has a ratio of 1600 to 5 and is used for larger currents. In general one furnace only is in use at any one time, but two furnaces can be operated, at the same voltage, and the current taken by each measured with the aid of the two current transformers. The omnibus-bar *C D* is in two parts, and when these are separated by removing the connecting link, two furnaces, F_1 and F_2 can be supplied with current at different voltages.

G H is the instrument board with voltage connections *v v v* from the various points and current connections from the current transformers through the switch *S* to the ammeter A_2 and wattmeter *W*.

The voltmeters V_1, V_2, having ranges of 75 volts and 150 volts, and the voltage terminals of the wattmeter are connected by flexible cords and plugs.

CHAPTER VII

THE PRODUCTION OF PIG-IRON IN THE ELECTRIC FURNACE

Iron is employed in the mechanic arts in combination with variable amounts of carbon and other metalloids and metals, as wrought iron, cast iron, or steel. These terms cover a wide range of different materials.[1]

Cast-iron, or **pig-iron,** is the form in which the metal is usually obtained from the ore; it contains from 2 per cent. to 4.5 per cent. of carbon, from 1/2 per cent. to 4 per cent. of silicon, and small but variable amounts of manganese, sulphur and phosphorus; the remainder being iron. The carbon and other elements are absorbed by the iron during its production in the blast-furnace, and make it more easily fusible than if it were pure; the melting temperature of pure iron being 1505° C., or 2740° F., while that of cast-iron varies from about 1027° C. to 1275° C., or from 1880° F. to 2327° F., depending upon its composition. The fusibility of cast-iron makes it suitable for use in the foundry, but the presence of a large amount of carbon and other metalloids renders it far less valuable mechanically than the purer forms of wrought-iron and steel.

Wrought-iron consists of nearly pure iron, retaining only small amounts of carbon and other metalloids, together with a small amount of admixed slag. It is made by melting pig-iron in the "puddling" furnace in contact with a cinder or slag rich in oxides of iron. The carbon and other metalloids in the pig-iron are largely removed by reaction with this slag and the nearly pure iron forms in grains in the furnace, being too infusible to be melted. These grains of iron are welded together, but still retain some of the slag from the furnace. The puddled iron, after being rolled into bars, is cut into short pieces which are made into bundles or "piles," which are reheated and rolled into bars or other shapes. The operation of "piling" removes some of the slag, and improves the quality of the iron. A large amount of so-called wrought-iron is made by piling pieces of mild steel.

[1] The different varieties of iron and steel have been defined by the International Association for Testing Materials. Jour. Iron and Steel Inst., 1906, iv, p. 699.

Steel is a very comprehensive term, and includes:

(a) Crucible steel, which is made from carefuliy selected varieties of wrought-iron or steel, has been melted in crucibles, and contains from about 3/4 per cent. to 1.5 per cent. of carbon, together with enough manganese and silicon to produce a sound casting.

(b) Bessemer and open-hearth steels include all the products of these furnaces, and may range from the hardest of tool steel to a material which is practically pure iron, and only differs from wrought-iron in having been fused, and being in consequence nearly free from slag, and in the presence of a little manganese, added to ensure a sound casting.

The production of iron and steel in the electric furnace may be considered under three heads:

I. The production of pig-iron by heating iron-ore with carbon and fluxes in an electric furnace.

II. The production of steel by melting steel scrap, either alone or with the addition of pig-iron, iron-ore, etc., in an electric furnace.

III. The production of steel by heating iron-ore with carbon and fluxes in an electric furnace.

THE PRODUCTION OF PIG-IRON

Pig-iron is generally produced by smelting iron-ore in the blast-furnace with carbonaceous fuel, usually coke or charcoal, and limestone.

The ore is almost always an oxide of iron and the coke or charcoal serves the double purpose of supplying heat by its combustion in the blast of air and of "reducing" the oxide of iron to metal by combining with its oxygen. The fuel does not burn completely in the blast, forming carbon dioxide, but only incompletely with the formation of carbon monoxide. It is the carbon monoxide so produced that is mainly effective in reducing the oxide of iron to metal. The metallic iron becomes saturated with carbon, forming pig-iron which accumulates in the bottom of the furnace and is tapped out at intervals.

After the oxide of iron has been reduced to metal there remains the gangue of the ore which is mostly silicious and clayey in character, and the ash from the coke. This is fluxed, or rendered fusible, by the limestone, which was included in the charge, and melts down forming the slag.

It should be noted that the iron oxide is reduced to metal, whereas

the lime, silica, and alumina in the charge, which are also oxides, are not reduced to the metallic state but remain as oxides and so form a slag. This is because iron oxide is reduced more easily than the other oxides named. If the temperature were high enough, all these oxides would be reduced and the metallic base of each would enter the pig-iron.

In the blast-furnace a small part of the silica is reduced and the resulting metalloid silicon alloys with the pig-iron. The amount of silicon reduced depends on the temperature and other conditions in the furnace. About one-half of any manganese in the ore is reduced and enters the pig-iron, and nearly all the phosphorus in the ore finds its way into the iron.

The sulphur in the charge is derived mostly from the coke which contains about 1 per cent. of that element. It is highly desirable to keep the sulphur out of the iron, and this can be done fairly well in the blast-furnace by the use of an excess of lime in the charge. The lime is partly reduced to calcium which forms calcium sulphide and passes into the slag thus removing the sulphur from the iron. A high temperature, limey slag and excess of fuel, all assist the removal of the sulphur.

The amount of fuel used in the blast-furnace is about equal to the amount of pig-iron produced. Coke is the fuel most commonly used, but sometimes charcoal is employed. Charcoal contains far less sulphur than coke does, and on this account "charcoal iron" can be made freer from sulphur and with less silicon than ordinary pig-iron. The high cost of charcoal prevents its general use in iron smelting. Anthracite and other non-coking coals are sometimes used in the blast-furnace, but are less suitable than coke or charcoal.

THE ELECTRICAL PRODUCTION OF PIG-IRON

In the blast-furnace the fuel is used partly to produce heat and partly as a reagent for the reduction of iron oxide to metal. In the electric furnace the heat is furnished electrically and the carbonaceous fuel is needed merely for the chemical operation of reducing oxide to metal. The amount of fuel needed for this purpose is about one-third of the amount needed for smelting the ore in the blast-furnace. The amount of electrical energy needed is about 1/4 E.H.P. year per ton of pig-iron.

Comparing the cost of smelting by the two methods, it may be stated generally that the blast-furnace needs 1 ton of fuel for 1 ton

of pig-iron, while the electric furnace needs 1/3 ton of fuel and 1/4 E.H.P. year per ton of pig-iron. Assuming that the remaining items of cost are about equal for the two methods, it will be seen that for equal cost 1/4 E.H.P. year should cost the same as 2/3 ton of fuel, or 1 E.H.P. year should equal in cost $2\frac{2}{3}$ tons of fuel. Apart from other considerations, which will be advanced later, this indicates that electrical smelting of iron-ores to make pig-iron can only be possible where the electrical horse-power year costs less than $2\frac{2}{3}$ tons of fuel.

THE ELECTRIC FURNACE FOR IRON SMELTING

This consists of a smelting chamber constructed of refractory materials and provided with two or more electrodes usually made of carbon. The electric current passes between these electrodes through the smelting ore and the resulting slag and metal, thus producing the heat necessary for the operation. The charge of ore, fuel and flux usually descends some kind of shaft or chute before entering the smelting chamber. In the shaft it is exposed to the heat and reducing action of the gases produced in the smelting chamber, and is thus largely heated and reduced before reaching the zone of fusion.

Many types of furnaces have been tried and there may yet be material changes in the design. It seems advisable, therefore, to treat the subject historically, giving an account of the various experimental furnaces that have been constructed or designed before the later forms of furnace were evolved.

The Héroult Furnace.—The experimental Héroult furnace,[1] Fig. 78, as used at Sault Ste. Marie in the spring of 1906, consisted of a nearly cylindrical shaft in which a carbon electrode, *C*, was suspended. The furnace was built inside an iron casing, *N*, 4 ft. in diameter, bolted to a cast-iron bottom plate, *H*. The lower part of the furnace was lined with carbon, *G*, put in as a paste, and this carbon lining formed the lower electrode of the furnace, the current passing between *C* and *G* through the melting charge. One cable from the transformer was connected to *H*, and a number of iron rods, *I*, served to make better contact between the bottom plate and the carbon lining. The upper part of the furnace was lined with common fire-bricks, *M*, but the carbon lining was continued to a point

[1] Dr. Haanel, Report on Experiments at Sault Ste. Marie, 1907, pp. 3 and 46, and plate vii, Paul L. T. Héroult, U. S. patent 858,718; see Electrochem. Industry, vol. v, p. 325.

a little above the slag level, as it resists the solvent action of the slag much better than fire-brick. The interior of the furnace tapered a little, upward and downward from the point at which the brick and carbon linings met. Two tapping holes were provided, the lower one which leads to the spout, *S*, for the pig-iron, and the upper one, *D*, for the slag. The upper electrode was supported by the holder, *AB*, which has already been described (Chapter IV), and which was suspended by a chain so that it could be raised or

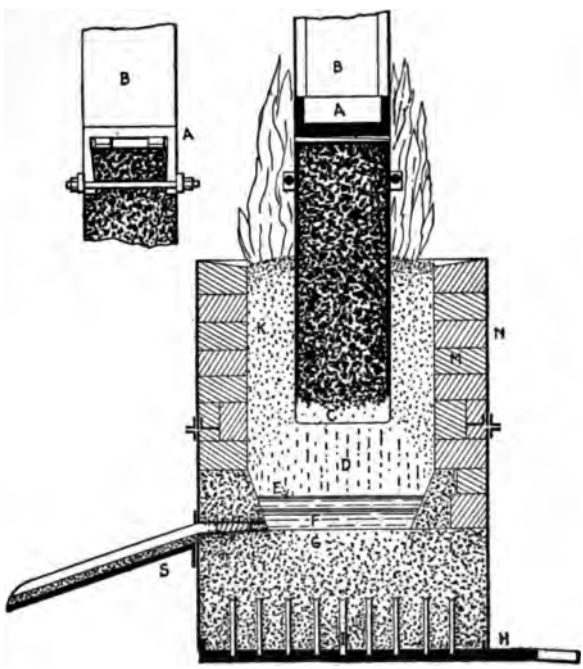

FIG. 78.—Héroult ore-smelting furnace.

lowered; the regulation of the electrode would normally be automatic. The electric current was led to the electrode through the holder *AB*.

An iron casing is very convenient in the construction of any kind of furnace, but for an electric furnace using an alternating current, the complete iron ring, *N*, through which the current has to pass, would be very objectionable, as it would increase the inductance of the circuit; thus opposing the passage of the current, and lowering the power factor. On this account, a vertical strip of the iron case, 10 inches wide, was replaced by a copper plate.

In operating the furnace, the current is started between the electrode, *C*, and the bottom of the furnace (a little coke could be placed in the furnace, if necessary, to prevent too large a rush of current on making contact), and the ore, mixed with charcoal and fluxes, is fed in around the electrode. The heat generated by the electric current will heat the charge around the end of the electrode, and as the charge becomes partly reduced and melted it will carry the current more readily, and the electrode can be gradually raised until it reaches its normal position. The part of the furnace between *C* and *G* may be considered the zone of fusion, and contains molten pig-iron, *F*, molten slag, *E*, and a mixture, *D*, of charcoal and melting slag and metal.

The ore charged into the furnace contains iron in an oxidized condition, and this oxide of iron is reduced by the charcoal, forming metallic iron and carbon monoxide. This direct reduction by charcoal probably takes place mainly in the lower and hotter part of the furnace, but the carbon monoxide, so formed, is itself a good reducing reagent and reacts with the oxides in the upper part of the furnace, partly reducing these and liberating carbon dioxide, which is again reduced, in part, to carbon monoxide by the charcoal in the charge. The reactions may be represented as follows:

$$Fe_2O_3 + CO = 2FeO + CO_2.$$
$$FeO + C = Fe + CO.$$
$$CO_2 + C = 2CO.$$

It will be seen that the gas escaping from the furnace must be rich in carbon monoxide, and is therefore more valuable than the gas from an ordinary blast-furnace which is largely diluted with nitrogen from the blast. In the illustration this gas is represented as burning around the electrode, above the charge, but in regular practice it would be employed to preheat the charge. The carbon monoxide will not reduce the iron-ore until the latter has become somewhat heated, and in electric smelting the heat will not penetrate so far up the descending column of ore as it does in the blast-furnace, as there is a much smaller flow of gas to carry the heat. The shafts of electric smelting furnaces will therefore not need to be so high, in proportion, as the shafts of blast-furnaces. In Figs. 78 and 79 the arrangement of the electrodes would also prevent a high furnace from being used, but this has been modified in later forms of the furnace, and the volume of the upper part of the furnace may be

effectively increased if the ore charge is preheated by the combustion of the carbon monoxide.

Turning now to the results obtained in this furnace, Dr. Haanel reports[1] that, in the experimental runs, which were begun about the middle of January, 1906, and continued until the 5th of March, some 55 tons of pig-iron were electrically smelted from hematite, magnetite, roasted pyrrhotite, and titaniferous ores. The furnace worked satisfactorily with all these ores, and pig-iron, low in sulphur, was obtained from the roasted pyrrhotite, and other ores of high sulphur content. Charcoal forms a perfectly satisfactory reducing agent, and this is important, since in Ontario and Quebec charcoal can often be produced cheaply from mill refuse, wood or even peat, while coke, suitable for blast-furnaces, must be imported. In this connection, it should be remembered that the coke or charcoal used in a blast-furnace should be of good quality, and able to stand the weight of the heavy column of ore without crushing; while in the electric furnace the quality of the reducing reagent is less important, and broken charcoal and partly charred wood was found to serve the purpose. The electric furnace differs from the blast-furnace in the absence of a blast of air, and in the possibility of attaining a higher temperature. Both of these differences are in favor of the electric furnace, and cause it to be a more powerful reducing and melting appliance than the blast-furnace. The strong reduction helps to drive the sulphur into the slag, as calcium sulphide, and the high temperature that is attainable allows a very limey slag to be used for the removal of the sulphur. Strong reducing conditions, although desirable as removing the sulphur, have the effect of increasing the amount of silicon in the pig-iron, and iron containing as much as 5 per cent. or 6 per cent. of silicon was obtained, with only 0.06 per cent. of sulphur when smelting the roasted pyrrhotite.[2] Dr. Haanel reports, however, that by increasing the limestone in the charge, the silicon in ferro-nickel pig has been lowered to 2 per cent. With less sulphurous ores the iron could be obtained high or low in silicon as desired, as the degree of reduction in the furnace is quite under control.

The consumption of electrical energy, in horse-power years per long ton of pig-iron, varied from 0.268 to 0.333 in the later runs on iron-ores.[3] If the carbon monoxide escaping from the furnace

[1] Preliminary Report, 1906, p. 8.

[2] 1907 Report, p. 84.

[3] 1907 Report, runs 12 to 17 in which charcoal was used.

were utilized for preheating the ore and flux, these figures would be reduced, and somewhat better results may be expected from furnaces of larger dimensions, and when the conditions for smelting have been more completely ascertained. The amount of charcoal used varied from 30 per cent. to 34 per cent. of the weight of the ore, or about 1,100 to 1,200 lb. of very poor charcoal per ton of pig.

After the conclusion of Dr. Haanel's experiments at Sault Ste. Marie, the plant was purchased by the Lake Superior Power Company, and has been used for the production of ferro-nickel pig from roasted pyrrhotite.[1]

The Keller Furnace (Fig. 79),[2] differs from the Héroult in having two vertical shafts, *NN'*, communicating below by a passage, *CC'*. Each shaft contains a carbon electrode, *D*, and the current from these electrodes flows, normally, through the molten metal *K* in *CC'*; but permanent carbon electrodes, *BB'*, connected electrically by a copper bar, *EE'*, serve to carry the current from one shaft to the other whenever the furnace is empty. *H* is an auxiliary electrode which may be employed for heating the metal in *K* if it should ever become chilled.

This furnace has the advantage of providing a receptacle, *K*, for the molten metal and slag; the metal being tapped through the hole, *K*, and the slag through the hole, *J*. The receptacle, *K*, corresponding to the fore-hearth or settler of a copper furnace, receives the molten products of two, or even four shafts, thus reducing the labor of tapping; and the use of two shafts, connected electrically in series, enables the current to be employed at a higher voltage than in the case of a single shaft-furnace. The working lining of the furnace is made by ramming a mixture of burnt dolomite and tar around a mold, and has been found to stand very well. As the heat is produced in the center of the shaft, it should be possible, by suitably proportioning the furnace to keep the walls at so moderate a temperature that they might be built of ordinary fire-brick, as in the blast-furnace. Fire-bricks are, however, rapidly corroded, even at moderate temperatures, by slags containing oxide of iron, and would only stand if the conditions were so strongly reducing as to convert the whole of this oxide to metal. It will be remembered that the working lining of the Héroult furnace was carbon, which is infusible and does not corrode unless exposed to

[1] 1907 Report, pp. 93–95.

[2] Dr. Haanel's European Report, 1904.

oxygen or metallic oxides, such as iron oxide. Such a lining will last if the furnace conditions are strongly reducing, and pig-iron is being made, but would not last if it were attempted to produce steel in the furnace, as there would be a considerable amount of iron oxide in the slag. A basic lining, such as dolomite, would then have to be used.

The ore enters the furnace through iron hoppers, *MM'*, which are provided with an annular space, *L*, into which the gases from

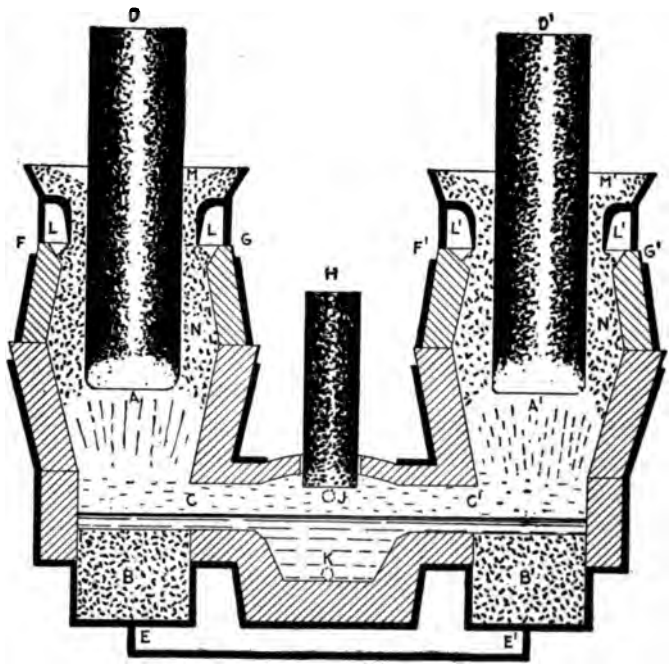

FIG. 79.—Keller furnace.

N can easily escape instead of passing up through the ore in *M*. From *L* the gases are withdrawn in pipes and utilized in any suitable manner, such as driving a gas engine or preheating the ore. The iron casing, round the furnace inspected by Dr. Haanel, was the cause of a very low power-factor being obtained, and it will be omitted or modified in the future.

The Haanel Commission visited the works of Messrs. Keller, Leleux & Co., at Livet, France, in March, 1904, and during their visit some 30 tons of ore were smelted electrically.[1] The ore was

[1] European Report, pp. 90–109.

hematite and contained 48.7 per cent. of iron and 10 per cent. of moisture. Coke, containing 7.6 per cent. of ash and 91.1 per cent. of fixed carbon, was used for reducing the ore, and the amount required varied from about 18 per cent. to 20 per cent. of the ore, from 17 per cent. to 19 per cent. of the ore and fluxes, or from 800 to 900 lb. per ton of pig-iron. The energy used, per ton of pig, was 0.532 E.H.P. years in the first experiment, and 0.253 E. H. P. years in the second experiment. In the first experiment the furnace was working badly, and the experiments at Sault Ste. Marie tend to show that the smaller of these figures may be considered reliable.

The Harmet Furnace (Fig. 80),[1] differs from the Héroult and Keller furnaces in having the electrodes inserted laterally into the lower part of the shaft instead of passing vertically down the furnace. The shaft, *S*, is enlarged below to allow of the insertion of the electrodes, *EE*, and the current passes between these through the melting charge, the slag, *C*, and the molten metal, *B*. The inclined lateral electrodes will probably be less satisfactory in actual use than a central electrode, because it will not be easy to regulate the current by raising or lowering them as is done in the other furnaces; supporting the electrodes in this position will also be less easy, and the walls will be apt to melt around the electrodes. On the other hand the height of the shaft, *S*, is not limited as in the Héroult furnace, by the length of the electrode; and better provision can be made for the preheating and reduction of the ore. Harmet utilizes the combustible gases escaping from the top of the shaft, for burning, in a separate furnace or calciner, in which the ore is calcined and preheated before being charged into the main furnace. Some of the gas is returned to the foot of the shaft, being blown in at this point to supply a reducing gas for converting the iron oxide to metal, and to carry some of the heat from the crucible up the shaft, so as to preheat and reduce the descending ore. The use of the gas to preheat the ore before charging into the furnace is very desirable, but there will be no need to blow gases through the smelting shaft, because reducing gases are always formed here in large amount, and because the combustion of the gas in the calciner would heat the ore to a temperature at which it would begin to be reduced to the metallic state directly it was introduced into the smelting shaft.

[1] Treatise on Electro-metallurgy of Iron, by Henri Harmet, European Report, 1904, pp. 124–164. Electrochemical Industry, vol. i (1903), p. 422.

Mr. Henri Harmet has written a treatise on the electro-metallurgy of iron, which is printed in Dr. Haanel's European Report, and in this he considers every conceivable way in which iron ores can be reduced by the joint use of carbon and electrical heat, but no mention is made of any actual furnace embodying his views—even on the experimental scale.

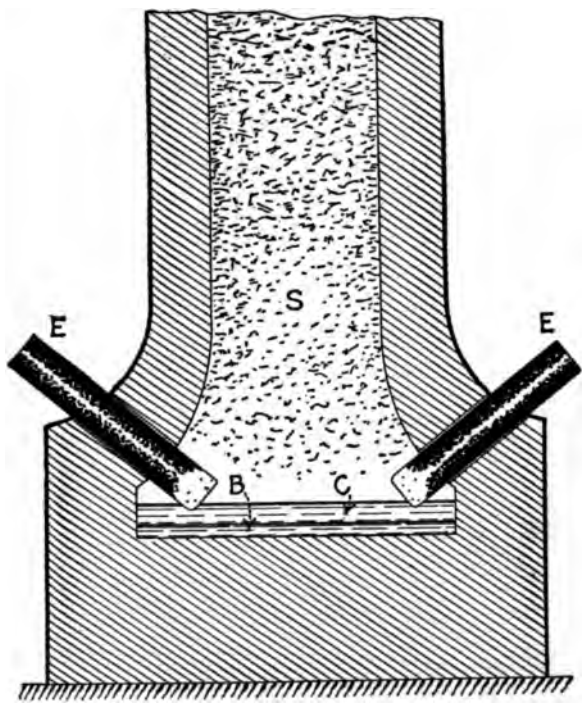

FIG. 80.—Harmet furnace.

The Haanel-Héroult Furnace, shown in Fig. 81,[1] is an improvement on Héroult's earlier furnace. The upper electrode no longer descends through the same shaft as the ore, but a separate opening is provided for it into the smelting zone of the furnace; while two lateral shafts are provided for the heating and reduction of the ore. The ore shafts, *A* and *B*, can thus be made of any desirable height, not being limited by the length of the electrode; and hoppers, *K K*, can be used for charging the ore, thus allowing the combustible gases to be led away through pipes, *L L*, for preheating the ore or

[1] Dr. Haanel's Sault Ste. Marie Report, 1907, plate ix, and pp. 92–93.

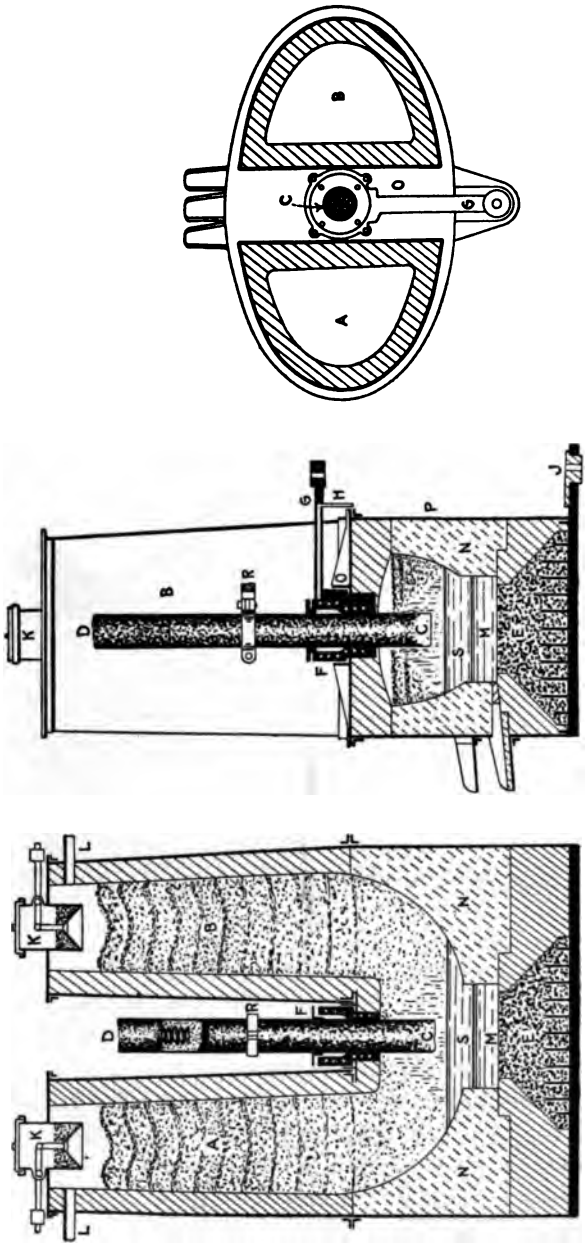

FIG. 81.—Haanel-Héroult furnace.

other purposes. The electrode, *C D*, also, is protected from heat and wear except at the working end, *C*.

The stuffing-box, *F*, through which the electrode enters the furnace, is needed to prevent the escape of gases. It is made of copper, is water-cooled, and is packed with wedge-shaped rings of graphite. The graphite packing not only makes a gas-tight joint, but also ensures an electrical contact between the electrode and the stuffing-box, so that the electric current can be led to the electrode by the arm, *G*. It should be noted that this use of the stuffing-box for electrode holder not only makes it serve a double purpose, but, by leading the current into the electrode as near as possible to its working end, does away with all needless production of heat by the passage of the current through the electrode. The furnace is cased with steel plates, but the top, *O*, and a strip at one side, *P*, as well as the stuffing-box, are made of copper, so as to avoid a complete ring of iron around the path of the current.

The furnace is shown filled with ore, flux and charcoal, as it would be during operation, and with molten slag and metal at *S* and *M*. These are drawn off through three tapping holes and spouts, of which the middle and lowest spout is for metal, while the other two are for slag. The shafts and other parts of the furnace are lined with fire-bricks, but the part, *N*, which is exposed to the action of melting ore, slag and metal, is composed of specially refractory material, such as magnesite. The arch across the middle of the furnace will also be particularly liable to corrosion and wear, but will be somewhat protected by the cooling effect of the stuffing-box.

The lower electrode, *E*, consists, as in the earlier furnace, of a rammed carbon plug, making contact with the aid of iron spikes to the heavy cast-iron bottom plate and so to the contact piece, *J*. The upper electrode is made cylindrical, to allow of its passage through the stuffing-box. Additional lengths, *D*, are attached by threaded joints as shown in section in the figure, thus avoiding any interruption in operation or waste of electrode. The piece *R*, clamped on the electrode, serves to hold it while a new piece is being screwed on, and also for raising or lowering the electrode.

No scale is given in the original drawing, which is merely intended to show the principles on which the furnace would be constructed.

The Turnbull-Héroult Furnace, Fig. 82,[1] is a modification of Héroult's original furnace which has been devised by his Canadian representative, Mr. R. Turnbull. As shown in the figure there are

[1] Dr. Haanel's Sault Ste. Marie Report, 1907, plate xviii, and p. 147.

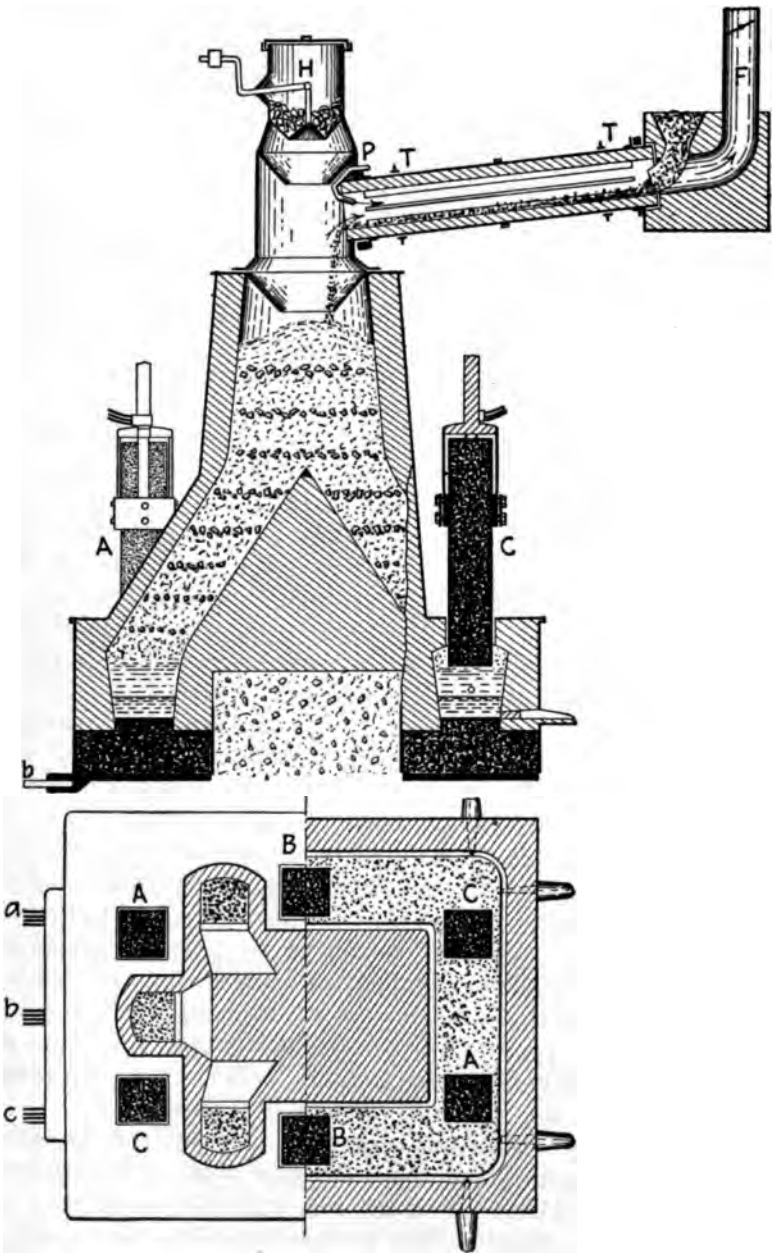

FIG. 82.—Turnbull-Héroult furnace.

six movable electrodes, descending into a smelting groove or canal, which forms a closed rectangle. The ore descends in a central shaft, and is distributed to the smelting groove by six inclined shoots, one descending between each adjacent pair of electrodes. The number of electrodes is preferably some multiple of three, so as to permit the use of three-phase current.

The three electrical connections, *a*, *b*, and *c*, on the bottom of the furnace, appear to indicate that the secondary windings of the three transformers are not connected together, but that the cables from one end of each are connected to *A A*, *B B*, and *C C*, respectively, while the return cables are all connected to the common terminal *a b c*, on the bottom plate of the furnace. The wiring for this arrangement is shown in Fig. 83, in which *Xd*, *Yd*, and *Zd* are

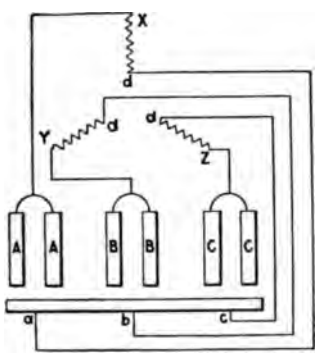

FIG. 83.—Connections for Turnbull-Héroult furnace.

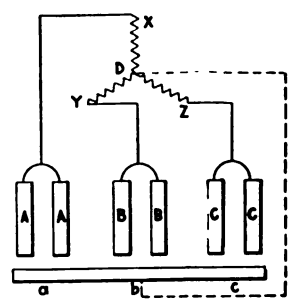

FIG. 84.—Connections for Turnbull-Héroult furnace.

the secondary windings of the transformers, each of which is connected to the furnace by two cables, one leading to a pair of movable electrodes and the other to the bottom of the furnace. It will be evident that by connecting the secondary windings in *Y* form as in Fig. 84, the return cables from *a b c* to *D* will be unnecessary, as each cable and pair of electrodes will serve as a return for the other cables and electrodes. Thus the current entering the furnace by the electrodes *AA* will pass down to the bottom of the furnace and pass up again by the electrodes *BB* and *CC*. This arrangement will save both the cost of the return cables, and the electrical energy wasted in them. It might, however, be desirable to use a single return cable between *a b c* and *D* to provide for any unbalanced current, as in the operation of replacing one of the electrodes.

When the furnace is once in regular operation the current will be carried from one electrode to another through the molten iron in the smelting channel, without needing to pass into the carbon bottom of this channel, and the carbon bottom might therefore be omitted. In a furnace using three-phase current, as represented in Figs. 83 or 84, a small proportion of the current will pass from *A* to *B*, or from *B* to *C*, directly through the charge without passing through the molten metal or the bottom of the furnace. In these furnaces the voltage between *A* and *B*, or between *B* and *C*, will be 1.73 times the voltage between *A* and *a*, or between *B* and *b;* and if the movable electrodes were near together, surrounded by a deep layer of charge, and raised considerably above the bottom of the furnace, the bulk of the current might pass directly between them, and the metal in the bottom of the furnace might become too cold or even solidify. In the Turnbull furnace, Fig. 82, there would be no danger of this as the electrodes are widely separated from each other, and are not raised very high above the metal in the furnace.

The upper part of the furnace, Fig. 82, is designed to utilize the combustible furnace gases for preheating the ore and limestone. This cannot be done in the main shaft of the furnace, for if air were introduced there to burn the gas, it would also burn the charcoal or other fuel in the ore mixture. A lateral rotating tube, *T T*, is therefore provided, down which the ore gradually passes. The combustible gases from the furnace burn in this tube, air being introduced through the bent pipe *P;* and the products of combustion escape by the flue *F*. The charcoal or other fuel is introduced through the hopper *H*, and is thus protected from the burning gas and air.

The preheating of the ore and limestone in the tube *T T* has several advantages. It calcines the limestone, removing the carbon dioxide which would otherwise rob carbon from the fuel; it roasts the ore, removing a part of any sulphur it may contain and leaving it in a better condition for the smelting operation; and the ore, by being heated, is fitted for immediate reduction to the metallic state when it enters the reducing atmosphere of the furnace, as well as gaining an amount of heat which would otherwise have to be furnished by the electric current. This preheating of the ore is not of great importance in a blast-furnace, where an ample supply of heat is carried up by the blast and serves to preheat an immense volume of ore to an increasingly high temperature as it descends in the furnace; but in the electric furnace only a small amount of

heated gas rises from the smelting zone to heat the descending ore, and the preheating of the ore is therefore very desirable.

In the figure, the electrodes are shown hanging freely in the furnace, but it is intended to have some form of stuffing-box to prevent the escape of gas. Each electrode would also need to be insulated from the metal casing of the furnace. The necessary supports and gearing for the tube, *T T*, are omitted in the drawing. The metal and slag are drawn off through suitable spouts which are shown.

A 2,000-h.p. furnace[1] of similar type was erected at Héroult, California, for smelting a rich magnetite ore with charcoal. The furnace had a guaranteed output of 20 tons a day. The location is favorable for electric smelting on account of the abundant water-power and the high price of pig-iron, and of fuel suitable for use in the blast-furnace. The furnace was formally started on the 4th of July, 1907, before the electrical equipment was thoroughly completed. It made some iron, 7 tons being drawn on the 17th July,[2] but for steady work more electric power was required. Information with regard to the furnace was given in the Mining and Scientific Press of July 20, 1907, and in the Electrochemical Industry, vol. v, p. 318, from which the following particulars are taken: The ore was a magnetite containing about 70.2 per cent. Fe., 0.012 per cent. S., 0.01 per cent. P., 2.4 per cent. SiO_2 and insoluble. Good limestone for flux was also available. The ore was expected to cost $1.50 per ton delivered to the smelter, and the electric power, $12 per horse-power-year. The best pig-iron was selling at $30 or $32 per ton in San Francisco, and it was expected that the electric pig-iron could be made and delivered there at a cost of from $15 to $18 per ton. In this furnace there were three electrodes supplied with three-phase, 60-cycle current at 50 volts; the amount of current used being stated as 30,000 amperes.[3]

Possibilities in Electric Smelting.—The early experiments on the electric smelting of iron-ores at Sault Ste. Marie and elsewhere, were all hampered by inadequate electrical equipment, by the small scale of the furnace, and by the fact that no use was made of the escaping furnace-gases. It is very desirable to know what improvement in efficiency may be expected when all possible improvements have been made in the design and

[1] Dr. Haanel, Report, 1907, p. 148.

[2] Engineering and Mining Journal, August 10, 1907, p. 278.

[3] For further particulars of this furnace see p. 203.

construction of the electric smelting furnace, and what is the minimum amount of fuel and electrical energy that will then be needed. For this purpose the operation of an ideal furnace may be studied, omitting for the present any consideration of how such a furnace could actually be constructed.

The ideal furnace shown in Fig. 85 consists of a smelting shaft divided by imaginary planes, *aa*, and *bb*, into three distinct zones, *A*, *B*, and *C*. The ore and limestone are introduced at the top of the shaft and are roasted and preheated by the gases leaving the zone *B*, which are burned in *C* by air introduced at *bb*. In the zone *B*, the roasted and preheated ore is partly reduced by the reducing gases leaving the zone *A*, enough combustible gas being left to preheat the ore in *C*. In the lowest zone, *C*, carbonaceous fuel introduced at *aa*, serves to complete the reduction of the ore to the metallic state, generating at the same time reducing gases which pass up the furnace, and to carburize the resulting iron; while the necessary heat is produced by electrical energy introduced for example by the electrodes, *E E*. The figure merely serves to show the principles of an ideal furnace as clearly as possible; any actual furnace embodying these principles would be constructed quite differently.

It is well known that in the iron blast-furnace the efficiency is limited by the composition of the escaping gases, at least half the carbon that is burnt in the furnace escaping in the half-consumed form of carbon monoxide. The same is true of any simple electric smelting-furnace, such as Héroult's experimental furnace in which the charcoal was introduced with the ore at the top of the furnace. If now the carbon monoxide escaping from such a furnace is burnt and used to preheat the ore, a certain saving of electrical energy would be obtained, but there would be no saving of fuel, and the burning of the waste gases would sometimes furnish more heat than was needed for preheating the ore, thus leading to waste and overheating of the top of the furnace. In the ideal furnace of Fig 85, part of the waste gases are used for a partial reduction of the ore in zone *B*, and the remainder is employed for preheating in zone *C*. In this way the greatest possible economy in both fuel and electrical energy can be obtained. As the fuel is used in this furnace both for reduction and for heating, it will be possible, within certain limits, to use rather more fuel and less electrical energy, or less fuel and more electrical energy, obtaining in both cases perfect combustion and economy, and the relative price of the two commodities would decide which to employ.

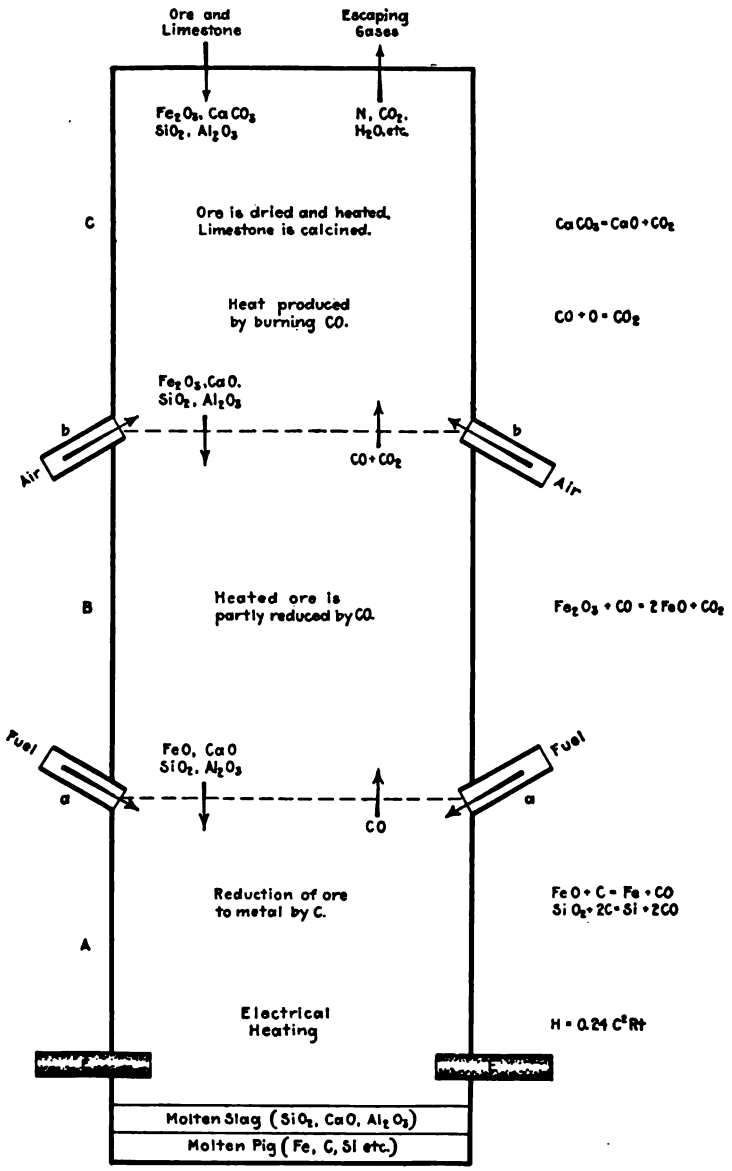

FIG. 85.—Ideal furnace for smelting iron ores.

A simple example will demonstrate the action of the furnace. Suppose that pure hematite ore, Fe_2O_3, is charged in at the top of the furnace and that pure carbon equal to 15 per cent. of the weight of the ore (two atoms of carbon to each molecule of ferric oxide), is charged at *aa*, together with as much additional carbon as is needed to carburize the iron. The ore, preheated in *C*, will be reduced to FeO in *B*, and in *A*, the FeO will be reduced to metallic iron. The equations show how this works out, and that on entering *C*, half of the carbon will have been fully burnt, and half will be in the form of carbon monoxide.

In *A*, $2FeO+2C=2Fe+2CO$.
In *B*, $Fe_2O_3+2CO=2FeO+CO+CO_2$.
In *C*, $CO+O=CO_2$.

The heat value of the carbon monoxide burning in *C* is 35 per cent. of the original heat value of the carbon, and this with the heat carried up by the furnace gases would heat the ore to about 1,500° C., which would be needlessly high. If on the other hand the carbon were reduced to about 11 per cent. of the ore (three atoms of carbon to two molecules of ferric oxide) the whole of the carbon would be required for reduction, leaving nothing for preheating. Deciding on some proportion of carbon between 11 per cent. and 15 per cent. of the ore, it would be possible to calculate how much electrical energy would be needed to supply the remainder of the heat for smelting.

In the experiments that have been made in electric smelting, non-volatile fuel such as coke or charcoal has been employed, because the volatile matter arising from a fuel like soft coal would not only be wasted but would have made the operation of the furnace decidedly unpleasant. In the ideal furnace, ample provision is made for the use of carbonaceous gases in the zones *B* and *C*, and any kind of fuel, even oil or natural gas, could be used effectively if introduced at the point *aa*.

The fuel entering the ideal furnace is completely burnt before it leaves the furnace, and the whole value of it and of the electrical energy may be communicated to the charge. The fuel is used in part for the chemical work of reducing the oxides to metal and carburizing the resulting iron, and the heat from the remainder of the fuel and from the electrical energy is used in part to furnish heat for the chemical changes that must be effected in the ore, and in part leaves the furnace in the molten metal and slag, in the gases escap-

ing from the top of the furnace, and by conduction through the walls of the furnace. The heat consumed in chemical reactions is an essential part of the operation, the heat carried out by the molten slag and metal is usually considered to be an unavoidable loss, though some of this might be recovered if it were worth while, the heat escaping in the gases at the furnace top may be reduced to a very small proportion of the whole, and the loss by conduction through the walls can be reduced to a moderate proportion in well-built furnaces of large dimensions.

A few examples will now be given to show what will be the minimum amount of fuel and electrical energy needed for smelting an iron-ore in such a furnace.

The first example is one given by Prof. Richards[1] and shows how much electrical energy and good charcoal would be needed to smelt a magnetite ore, obtaining a gray pig-iron.

The magnetite ore contains:

Fe_2O_3	60.74 per cent.	MgO	5.50 per cent.
FeO	17.18 per cent.	P_2O_5	0.04 per cent.
SiO_2	6.60 per cent.	S	0.57 per cent.
Al_2O_3	1.48 per cent.	CO_2	2.05 per cent.
CaO	2.84 per cent.	H_2O	3.00 per cent.

It is to be mixed with a good variety of charcoal, assumed 90 per cent. carbon and 10 per cent. moisture, and with enough pure silica sand to make a slag with 33 per cent. silica. The pig-iron is to contain 4 per cent. carbon, 3.5 per cent. silicon, and 92.4 per cent. of iron. One ton of pig-iron will require 1.654 tons of iron-ore for its production. Taking first the case in which the gases entering zone *C* contain two volumes of CO_2 to one volume of CO. The carbon needed for one metric ton of pig will be 224 kg.; that is 249 kg. or 550 lb. of charcoal. The electrical energy required will depend upon how much heat is lost by conduction and radiation from the furnace, and in the escaping gases. Supposing first that the gases are quite cold, and that no heat is lost by radiation, etc. the electrical energy needed would be about 0.13 horse-power-years per metric ton of pig, while if the more reasonable assumption were made that the gases escaped at 300° C., and that the losses by conduction and radiation from the furnace were 20 per cent. of the heat generated, (that is of the electrical heat and of the heat produced by the gases burning in the zone *C*), 0.20 horse-power-years of electrical energy would be needed. In this case the heat produced

[1] Richards Metallurgical Calculations, vol. ii, Problem 76, p. 404.

in C by burning gases was about 30 per cent. of the heat produced electrically. It would be possible to use rather less charcoal and more electrical energy, or less electrical energy and more charcoal than indicated in this example, but taking these figures as fairly typical of the amount of good charcoal and of electrical energy actually employed in the furnace, it will be necessary to make certain additions if the results are to represent working conditions. Thus to the electrical energy must be added the losses in transformers, cables and connections, say 10 per cent., raising the figure to 0.22 horse-power-years, and a further addition must be made to allow for the fact that the furnace will not be operated continuously during the year, and that even when it is running it will not always draw the full power for which payment is made. In this connection it will not be necessary to consider the time when the furnace may be out of work for long periods for repairs, as provision would be made by having a spare furnace, to employ the power as regularly as possible. A certain loss of charcoal will occur through mechanical losses, and it will probably be safe to allow 600 lb. of charcoal and 0.25 E.H.P. years per ton of pig-iron as the final solution of the above problem.

As another example may be taken the thirteenth experimental run with the Héroult furnace at Sault Ste. Marie in February, 1906.[1] The run lasted 61 1/2 hours, the mean current was 5,000 amperes at 35.7 volts, with a power factor of 0.919, giving 164 as the mean kilowatts during the run. 12,858 lb. of pig-iron were obtained with a consumption of 1,140 lb. of charcoal and 0.268 E.H.P years per ton of pig.

The ore was magnetite from Wilbur mine, containing:

SiO_2	6.20 per cent.	MgO	6.84 per cent.
Fe_2O_3	55.42 per cent.	MnO	0.26 per cent.
FeO	23.04 per cent.	P_2O_5	0.023 per cent.
(Fe	56.69 per cent.)	(P	0.01 per cent.)
Al_2O_3	2.56 per cent.	S	0.05 per cent.
CaO	2.00 per cent.	CO_2, etc	3.61 per cent.

The charcoal contained 14.0 per cent. moisture, 27.56 per cent. volatile matter, 55.9 per cent. fixed carbon, 2.54 per cent. ash, and 0.058 per cent. sulphur.

[1] Dr. Haanel, 1907 Report, p. 46. The figures in the Report refer to the 2,000-lb. ton of pig-iron. In this book the author has adopted the long ton of pig-iron, and occasionally the metric ton which is almost identical, as agreeing more generally with commercial practice.

During the run 21,150 lb. of ore was smelted with 6,555 lb. of charcoal, and 1,191 lb. of sand for flux. The sand contained 81.71 per cent. of silica, and 14.27 per cent. of alumina, with 1.6 per cent. of lime and 1.11 per cent. of magnesia.

The mean analysis of the pig-iron was:

Si, 1.75 per cent.; S. 0.029 per cent.; P, 0.022 per cent.; Mn, 0.23 per cent.; C, 4.58 per cent.

Supposing that the ore were smelted in a simple furnace such as was actually used, in which the ore, flux and charcoal are all charged into the furnace at the top, and no use is made of the escaping gases, it will be necessary to make some assumption in regard to the composition of these gases as no information is given. Assuming that they consisted of equal volumes of CO and CO_2, it will be found that the carbon required to reduce the ore and carburize the pig-iron will be 14 per cent. of the ore, which will correspond to 25 per cent. of charcoal, or 930 lb. of charcoal per ton of pig. In the actual case 1,140 lb. were used, part of which was, however, burned on the top of the charge. Assuming further that the gases escape at 400° C., and that 20 per cent. of the electrical heat is wasted by radiation and conduction from the furnace, a calculation showed that 0.267 E.H.P. years per ton of iron would be needed, a figure which agrees better than could be expected with the amount actually used, which was 0.268.

If now the same charge were smelted in the ideal furnace, so that the escaping gases were utilized to preheat the charge, and allowing for the loss of 20 per cent. of the electrical heat and 20 per cent. of the heat produced by the burning gases, it will be found that only 0.216 E.H.P. years would be needed.

In this calculation only the fixed carbon in the charcoal has been considered, but with the ideal furnace the volatile matter in the charcoal would also be of use for reducing and preheating the ore in the upper zones of the furnace. A smaller amount of charcoal and electrical energy would therefore be sufficient.

In conclusion it may be stated that in an electric furnace of good construction, one ton of pig-iron should be obtained with the use of 600 to 800 lb. of charcoal and about 0.20 to 0.22 E.H.P. years, and that in order to allow for delays the amount of electrical energy should be raised to about 0.25 E.H.P. years.[1]

[1] These figures apply to ores of 50 per cent. or 60 per cent. of iron. For poorer ores a larger amount of electrical energy would be needed, but the amount of charcoal per ton of pig would not be much increased.

The only furnace illustrated in these pages in which the escaping gases are used to preheat the charge is the Turnbull furnace, Fig. 82. The main part of this furnace corresponds to zone *A* of the ideal furnace and the preheating tube to zone *C*. There is thus nothing corresponding to zone *B*, in which the gases from the lower part of the furnace can exercise their reducing action on the preheated ore. It remains to be seen whether this zone will be required in practice.

After devising the ideal furnace of Fig. 85, in which the greatest advantage is taken of the fuel and of the electrial power, the author found that it had already been invented and patented by Paul Héroult,[1] who introduces the air by tuyeres at *bb*, and supplies the fuel by a vertical tube down the center of the furnace to the level *aa*.

Collecting the results that have been obtained in the electrical production of pig-iron from the ore, it may be stated that the process is technically successful, and gives better results than the blast-furnace in regard to the use of sulphurous ores, titaniferous and similar refractory ores, and ores in a state of powder such as iron sand, or ores which have been concentrated by magnetic or similar processes. The process also allows of the use of inferior and, therefore, cheaper fuel. The power required is about 1/4 horse-power-year, per ton of pig-iron, depending on the richness of the ore. The fuel used for reducing and carburizing the iron is 600 or 800 lb. of coke or charcoal, which need not be of good quality.

Comparing the cost of smelting by the two processes, apart from considerations of the scale of working, which will at first greatly hamper any electric-smelting project, the main items of cost to compare are the fuel and the electric power. Thus in the electric furnace the ton of pig-iron would require, at present, 1/4 horse-power-year, and 600 or 800 lb. of coke or charcoal, while the blast-furnace would require some 1,900 or 2,000 lb. of coke for pure and easily reducible ores, and as much as 2,500 lb. or 3,000 lb. when poor ores and coke are used. Balancing the cost of 1/4 horse-power-year against the cost of the coke that is saved, will give a general idea of the prices of coke and power which would permit of electric smelting. Of the other expenses of the two methods, the electric furnace, receiving high-voltage current at a certain price, would require transformers and heavy cables from these to the furnace. The carbon electrodes must also be supplied. The blast-furnace, on the other hand,

[1] P. L. T. Héroult. Apparatus for smelting iron ore. U. S. patent 815,293, March, 1906. Electrochemical Industry, vol. iv, 1906, p. 152.

has the expense of the blowing engines with their attendant boilers, and of the enormous hot-blast stoves for preheating the blast.

RECENT DEVELOPMENTS IN ELECTRICAL IRON SMELTING

The greatest progress in this direction has been made in Sweden, where conditions are most favorable for the commercial development of this process. Three Swedish Engineers, Messrs. Grönwall, Lindblad, and Stalhane, were impressed by the experiments carried out by Dr. Haanel at Sault Ste. Marie in 1906, and decided to devote their energies to the production of a furnace for the commercial operation of this process in Sweden.[1]

In view of the fact that iron smelting in Sweden is done by means of charcoal, and that water-powers are abundant and cheaply developed in that country, the electrical smelting of iron-ores is a matter of great importance to the iron masters there, who accordingly assisted very materially the efforts of these three engineers. More than $100,000 was spent during two years in developing a furnace which should meet the requirements. Seven different furnaces were tried,[2] four of which are illustrated here.

In the furnace used at Sault Ste. Marie the carbon electrode passed down the shaft, and this construction would obviously be impossible in furnaces of any considerable size. The main point to be determined was how to introduce the electrode, and in the earlier furnaces shown in Figs. 86 and 87 attempts were made to dispense altogether with carbon electrodes, employing in their stead electrodes of molten pig-iron similar in principle to those of the de Laval furnace, Fig. 20.

In the furnace shown in Fig. 86, tuyeres were employed as in ordinary blast-furnace practice, it being the intention to start the furnace like an ordinary blast-furnace and when in regular operation to switch on the current and run it electrically. The top of the furnace was provided with a cup and cone for charging, and an off-take for the gases as in usual practice. The electrodes consist of two parallel channels *AB*, containing molten pig-iron. These channels extend under the shaft of the furnace and pass out into pockets, *CD*, lined with carbon by means of which electrical connection is

[1] Haanel, Report on Electric Shaft Furnace, Domnarfvet, Sweden, Ottawa, 1909.

[2] Haanel, Bull. No. 3, Recent Advances in the Construction of Electric Furnaces, Ottawa, 1910.

made to the molten iron. Within the furnace the electric current passes from one channel to the other through the slag and melting charge, thus producing the heat for running the furnace. Between these channels is a third channel, *E*, for tapping the iron and slag from the furnace, and it appears that molten iron will flow from the side channels (when these are full) to the central channel, thus

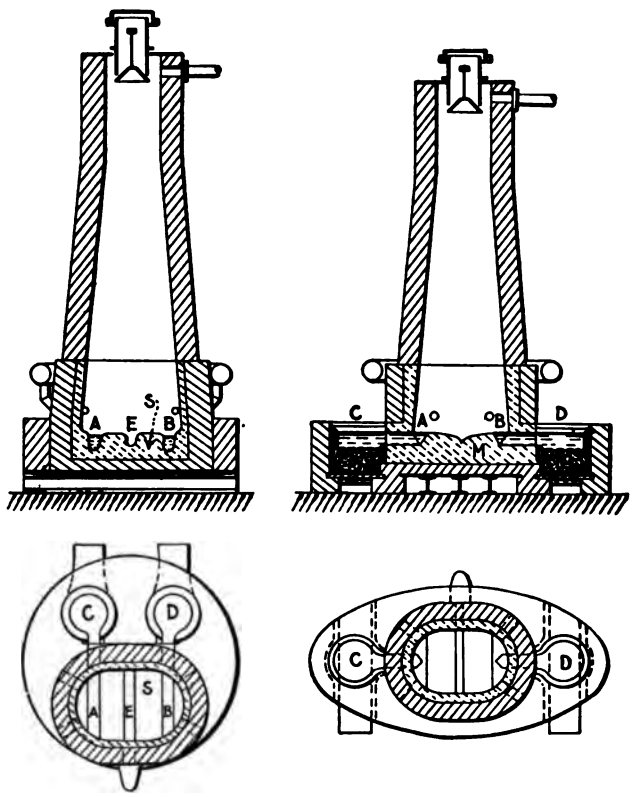

FIG. 86.—Domnarfvet furnace No. 1. FIG. 87.—Domnarfvet furnace No. 2.

partially short-circuiting the furnace. The hearth of the furnace was lined with silicious material, *S*, and as might have been expected, this lining did not last long, due no doubt to the excessive flow of current close to the lining. This failure of the lining would lead to short circuits and thus put an end to the operation of the furnace. In Fig. 87 the hearth was lined with magnesite, *M*, which was expected to be more refractory than the silicious lining, and the molten

iron electrodes were led in at opposite points of the furnace so as to avoid as far as possible the danger of short-circuiting. The same defects were bound to occur however in this case and the furnace had to be given up.

With reference to these furnaces using molten iron as electrodes, it may be pointed out that the central groove for tapping out the metal appears to be an unnecessary source of weakness and that

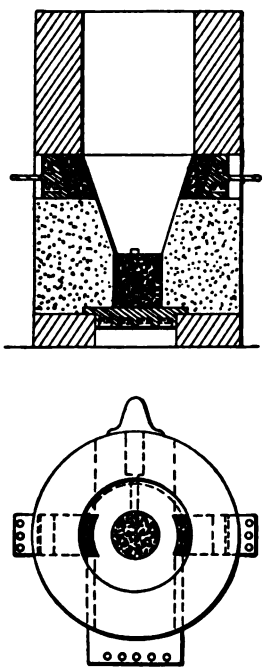

FIG. 88.—Domnarfvet furnace No. 3.

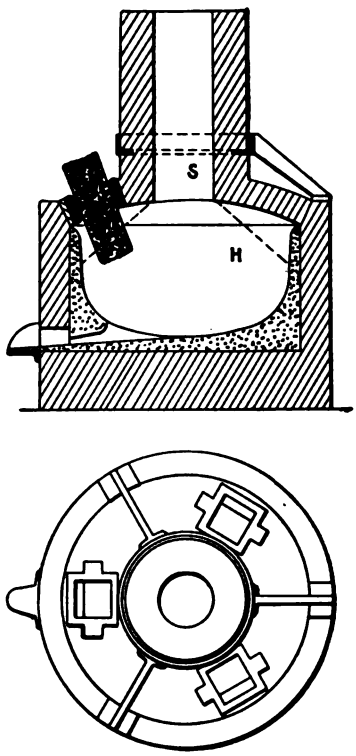

FIG. 89.—Domnarfvet furnace No. 4.

the original design of the de Laval furnace, Fig. 20, in which the molten metal is withdrawn from the electrode channels, is more favorable in view of the need of avoiding short circuits.

After trying molten iron electrodes, a furnace was designed, which is shown in Fig. 88, having three graphite electrodes. One of these was in the bottom of the furnace and was covered and protected by the molten iron; the other two were placed at the sides of the

furnace and were in contact with the melting ore. The electric current would pass from the upper electrodes to the bottom electrode, and if desired could be made to pass between the two lateral electrodes. The furnace worked satisfactorily for a time but the brick work around the upper electrodes became corroded, due to the high temperature produced at these points. The experience gained with this furnace showed that the electrode should not be in contact with the furnace wall and the ore at the same point. The next design of furnace was arranged to avoid this contact. This furnace, shown in Fig. 89, consists of a somewhat narrow shaft, *S*, and a wider hearth, *H*, into which the shaft enters. The electrodes, of which there are three, enter through the arched roof of the hearth, and the ore lying at its natural angle of repose does not reach the roof of the furnace at the points where the electrodes enter.

As the result of the preliminary experiments the furnace shown in Fig. 89 was adopted as the most suitable, and in the year 1908 a larger furnace of the same general pattern was erected.[1] A section of this furnace is shown in Fig. 90.[2]

Domnarfvet Furnace.—The furnace consists of a circular smelting chamber 7 ft. 6 in. in internal diameter and 5 ft. high, surmounted by a shaft 17 ft. high and 5 ft. in maximum diameter. This shaft is reduced at its lower end to about 3 ft. in order that the ore passing through this restricted opening and lying within a cone shown by the dotted lines shall not come in contact with the roof of the smelting chamber at the point where electrodes enter. The smelting chamber or hearth of the furnace is constructed of fire-brick and has a lining of magnesite. It is provided with a single tapping-hole. The shaft of the furnace is constructed of fire-brick and is supported on steel struts so that the weight does not press upon the roof of the smelting chamber. The ore and fuel are charged through a cup and cone of special design, the Tholander charging bell, which is common in Swedish blast-furnaces. This is designed to allow of the charcoal being delivered to the middle of the furnace and the ore to the sides. A movable hood covers the charging apparatus and serves to prevent the escape of gases or the entrance of air during charging. There are two gas off-takes, one of which permits the gas to escape outside the building, and the other communicates to a dust-catcher and from that to a fan which serves to blow a portion

[1] Haanel, *loc. cit.*

[2] Reproduced from illustration in paper by Dr. Haanel, Trans. Am. Electrochem. Soc., xv, 1909, p. 26.

of the gases into the smelting chamber through three tuyeres entering just beneath the arch of the furnace. The furnace is provided with three electrodes entering through the arched roof and supplied with three-phase current. The electrodes enter through water-cooled stuffing-boxes, which can be kept tight by means of asbestos packing. The electrodes themselves are 11 in. × 22 in. in cross-section and as electrodes of this size were not available they were

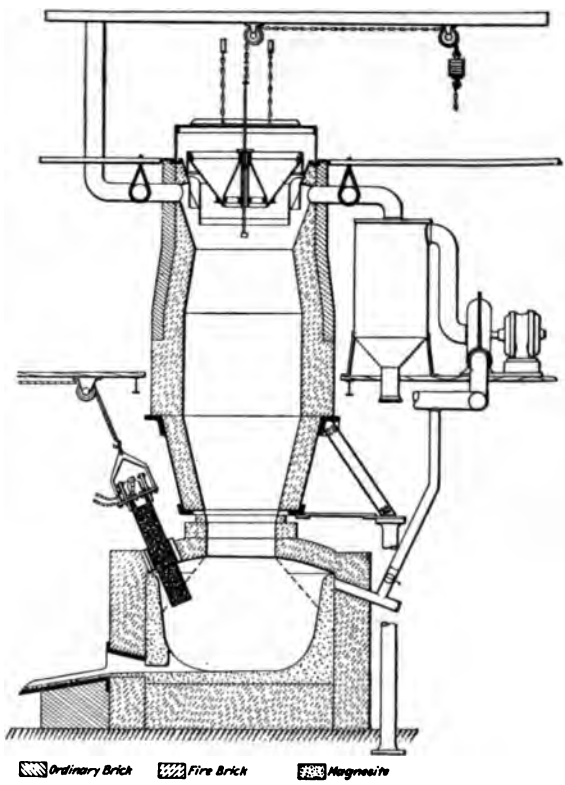

FIG. 90.—Domnarfvet furnace, final form.

made by clamping together two electrodes 11 in. square. The electrodes are held at their upper ends by clamping pieces which serve to lead in the electric current, and also to adjust the height of the electrode by means of a wire rope and winch. The electrode holder slides between guides. In operating a furnace of this design the gases produced in the smelting chamber are not sufficient in amount to heat the charge in the shaft to a temperature sufficiently

high for the reduction of the ore by carbon monoxide. The circulation system described above overcomes this difficulty by causing a portion of the gases from the top of the furnace to enter through the tuyeres and to pass up the shaft again. This circulation has the effect of conveying heat from the smelting chamber up the shaft where it serves to preheat the charge. The gases entering beneath the arch of the furnace also serve to cool this arch and prevent its becoming overheated or melted, and in this way the heat transferred to the shaft of the furnace is withdrawn from a point where it can be very well spared. The tuyeres are introduced midway between adjacent electrodes.

The electrical supply for this furnace was arranged to give great flexibility in operation and is different from what would be adopted in regular practice. It consists of a three-phase synchronous motor of 900 h.p. supplied with 60-cycle current at 7,000 volts. A three-phase generator, directly coupled to the motor, supplies 25-cycle current at a voltage which is adjustable by small steps from 300 to 1,200 volts. The current from the generator is taken to transformers, placed close to the furnace, by which the voltage is lowered in the ratio of 14 to 1; the secondary voltage ranging from 20 to 80 volts. In order that the full power of the plant (500 or 600 kw.) may be available throughout this range of voltage the transformers have a total capacity of 1,500 kilo-volt-amperes.

Results Obtained.—The furnace was erected in the year 1908 and a trial run was made at the end of that year. The run extended from the 7th of May to the 30th of July, 1909, and demonstrated that the design was satisfactory for regular operation besides giving valuable information with regard to the economy of the process. The ores smelted during this time were a number of Swedish magnetites. The fuel used was charcoal and mixtures of charcoal and coke, and the consumption of fuel varied from 0.30 to 0.39 tons per ton of pig-iron. The output of pig-iron was quite small, being about 4 tons daily, and the power consumption was somewhat large, averaging 2 tons of pig-iron per kilowatt-year. A better figure may be expected in the future. The consumption of electrodes was also somewhat large in this furnace, averaging about 30 lb. per ton of pig-iron. The power-factor of the furnace running at 25 cycles varied from 0.8 to 0.9 and may, therefore, be considered quite satisfactory.

In regard to the circulation of the gases, and the economy of the furnace, it is important to know the analysis of the gases leaving

the top of the furnace. These gases consist almost entirely of carbon monoxide and carbon dioxide. When the furnace is operated without circulation the top of the charge is quite cool, below 100° C., and the gases only contain about 10 per cent. of carbon dioxide. When the circulation is maintained the temperature of the furnace top rises to 200° C. or 300° C. and the percentage of carbon dioxide increases to about 30 per cent. or 40 per cent. It should be borne in mind that although a part of the gas is returned to the furnace this does not imply any diminution in the amount escaping. The economy of the furnace depends very largely on the analysis of the escaping gases, the efficiency being greater both in regard to fuel consumption and electrical power consumption when the proportion of carbon dioxide is high. It will be seen, therefore, that the circulation of the gases has a very important effect on the operation of the furnace.

Frick Electric Reduction Furnace.—The Frick furnace,[1] shown in Fig. 91, has been designed for the purpose of economizing electrodes. This is effected by the use of coke which is fed in around each electrode so as to form the working electrode. The electrode itself is vertical, and being surrounded by coke, its consumption should be greatly reduced. Otherwise the design and construction of this furnace is substantially the same as in the Domnarfvet furnace already described.

Californian Furnaces.—California offers a location favorable for the commercial development of the electric smelting of iron-ores. This is mainly on account of the high market price of pig-iron in that state. There are good water-powers for operating such furnaces and charcoal can be obtained at a reasonable figure. Conditions in California are not as favorable as in Sweden for the cheap production of electric pig-iron, but in view of the higher price of pig-iron in California a commercial industry may very probably be founded there. In 1907 a 2,000-h.p. furnace was erected by Paul Héroult at a place named Héroult on the Pitt River in Shasta Co.[2] This furnace which was expected to give 20 tons of pig-iron daily was started on the 4th of July, 1907, but did not prove satisfactory and was ulti-

[1] Eugene Haanel, Ph. D., Director of Mines, "Recent Advances in the Construction of Electric Furnaces for the Production of Pig-iron, Steel and Zinc." Bull. No. 3, Ottawa, 1910.

[2] Electrochemical and Metallurgical Industry, vol. v, 1907, p. 318; Haanel Report on Experiments at Sault Ste. Marie, Ottawa, 1907. See also reference to this furnace on page 189.

mately torn down. The furnace[1] consisted of a long elliptical-shaped iron box with refractory brick lining around the sides, and a carbon lining on the bottom, as in the simple Héroult furnace, Fig. 78, but provided with a roof. This formed a smelting chamber

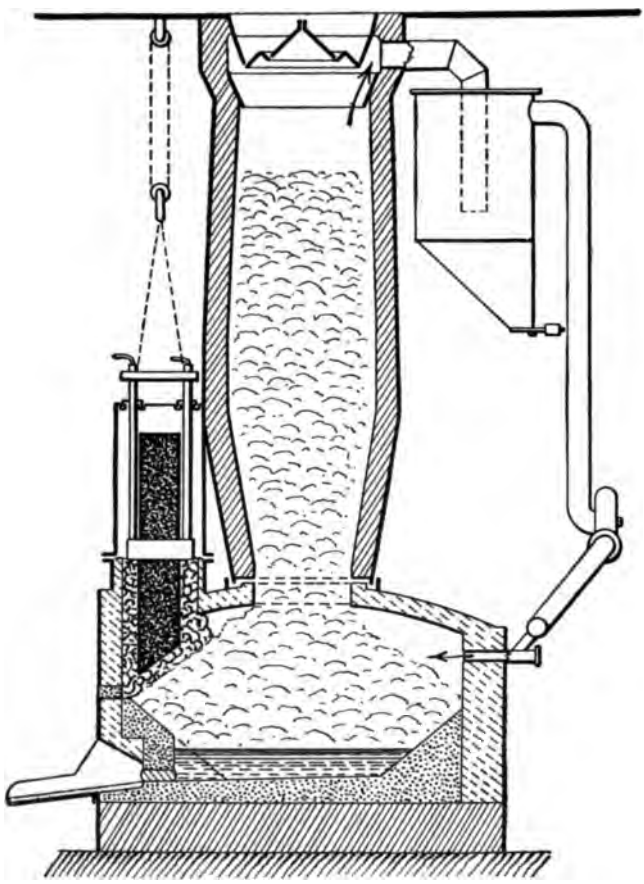

FIG. 91.—Frick iron-smelting furnace.

having three vertical carbon electrodes, each connected to one pole of a 1,500-kw. three-phase supply; the bottom of the furnace being connected to the neutral point as in Fig. 84. The electrodes were arranged in a straight line (the major axis of the furnace), and alter-

[1] D. A. Lyon, "The Electric Furnace in the Production of Iron from Ore." Met. and Chem. Engng., xi, 1913, p. 16.

nated with four vertical chutes for supplying the ore charge to the furnace. In order to preheat the charge, the chutes were heated by burning around them the gases liberated from the furnace. The chutes became choked with the heated ore, and even the roof could not be maintained in operation, so the furnace could only be employed with an open top and was finally given up.

As this furnace was not satisfactory, experiments were made under the direction of Prof. Dorsey A. Lyon of Stamford University.[1] In May, 1908, he had constructed a single-phase furnace using 160 kw. and having an output of 1 ton of pig-iron daily. He then constructed, in 1909, a furnace of 1,500 kw. This furnace was substantially the same as the Domnarfvet furnace. There was, however, no circulation of the furnace gases, and holes were provided by which air entered the shaft above the level of the charge. The air served to burn a portion of the gases within the shaft, thus heating the charge, and the escaping gases were led to chambers where the ore was preheated. In this way the ore entered the furnace at a fair temperature and there was not the same need, as in the Domnarfvet furnace, of circulating the gases for heating the charge in the shaft. Not very much has been published with regard to the operation of this furnace but the author understands that the electrodes gave trouble by breaking, and that it was found to be necessary, on this account, to employ the Acheson graphite electrodes. At the present time it is probable that carbon electrodes of sufficient size and strength can be obtained, and these can be furnished with threaded ends so that fresh lengths can be screwed on to the working electrodes whenever they become too short, thus affording a continuous feed and avoiding any waste of the stub ends.

The electrical equipment for the Lyon furnace consisted of three transformers of 750 kw. each, supplied with 60-cycle current at 2,200 volts. The voltage of the current passing to the furnace varied from 35 to 75 volts. The regulation was effected by means of taps in the primary windings; these being arranged to alter the secondary voltage in steps of three volts. In this furnace, as in other recent furnaces, there is no need to raise and lower the electrodes for the purpose of regulating the current. The electrodes are only moved occasionally as they wear away; the regulation of the current being effected by changing the voltage of the supply.

The Noble Electric Steel Company have recently developed

[1] D. A. Lyon, Am. Electrochem. Soc., vol. xv, 1909, p. 39.

another type of furnace,[1] which is now in commercial operation in California. This furnace has a general resemblance to the one constructed there by Dr. Héroult. It consists of a steel shell 27 ft. long, 13 ft. wide and 12 ft. high, lined with refractory material, and provided with an arched roof and a tapping hole. The ore charge enters through five vertical chutes, and the electric current by four vertical electrodes which alternate with the chutes, and all enter the roof at points on its longer diameter. The chutes are 2 ft. in internal diameter, and 15 ft. high. They are used merely for charging, no preheating being attempted. The electrodes are of graphite, 12 in. in diameter, and 4 ft. long, new sections being attached with a screwed connection (see Fig. 48). Each electrode lasts for 30 days in continuous operation. The electrode-jackets and the arched roof are water-cooled. Three 750-kw. transformers are connected to the 2,400-volt three-phase supply, and deliver current to the electrodes at 40 to 80 volts. The voltage regulation is effected by means of eight current taps and a compensator on the primary side which gives fifteen steps for voltage variation. Apparently (as there are four electrodes) the low-tension terminals of each transformer will be connected to each adjacent pair of electrodes so that each section of the furnace, between two electrodes, will receive the power from one transformer; the two end electrodes will, however, carry a smaller current than the other two.

The ore is a very pure magnetite containing 69.9 per cent. of iron and 2.4 per cent. of silica; it is smelted in admixture with charcoal, quartz and burned lime, a typical charge being:

Iron-ore	500 lb.
Charcoal	135 to 150 lb.
Lime	3½ lb.
Quartz	12½ lb.

In the operation of this furnace no use is made of the liberated gases, either for the preheating or the reduction of the ore, and the gases are not circulated as in the Swedish furnaces.

Since the above was printed, an illustrated account of the Californian plant has appeared,[2] in which it is stated that a 3,000 K. W. furnace of the same type has now been constructed. The power consumption has been as low as 2,200 K.W. hours (0.337 H.P.

[1] D. A. Lyon, "The Electric Furnace in the Production of Iron from Ore," Met. and Chem. Eng., xi, 1913, p. 17.

[2] J. Crawford, "Progress of Electric Smelting at Héroult, California," Met. and Chem. Eng., xi, 1913, p. 383.

years) per ton of pig iron, when using 3,000 K.W. The charcoal used for reduction (for a pig of 1.5 per cent. silicon) carries fixed carbon equal to about 26 per cent. of the ore, which will be about 0.40 ton of charcoal per ton of pig. The charcoal is calculated on the assumption that the ore is reduced entirely by carbon, and not at all by CO. The furnace gases contain about 62 per cent. of CO and 7 per cent. of CO_2. The furnace is admitted to be less efficient than the Swedish furnace, but it is more easily operated, and a saving is effected by using the gases for heating lime-kilns and charcoal-retorts.

Helfenstein Furnace.—This furnace was devised for the production of calcium carbide and ferro-silicon, and is described under these headings. It resembles the Californian furnace in principle and has recently been applied to the smelting of iron-ores. A furnace with six shafts uses 24,000 h.p. and has an output of 250 tons of pig iron per day.[1]

Trollhättan Furnace.—After the experience gained with the 700-h.p. furnace at Domnarfvet the "Aktiebolaget Elektrometall" proceeded to construct a larger furnace of 2,500 h.p. at Trollhättan.[2] In this undertaking they were assisted by the Swedish Government who furnished them with power at a nominal figure from their Trollhättan power station. The furnace shown in Fig. 92[3] resembles the Domnarfvet furnace in general construction, but the shaft of the furnace is supported in a different manner and the furnace is provided with four electrodes instead of three. The furnace is 45 ft. high, the hearth is 12 ft. 6 in. in internal diameter and 7 ft. high. The shaft is 7 ft. 6 in. in internal diameter and is reduced to 4 ft. at the point where it enters the hearth. The four electrodes were each 26 in. square, but more recently round electrodes, 24 in. in diameter, have been used. The hearth is built in a steel shell, it is lined with fire-brick and has an inner lining of magnesite-brick. The basin-shaped bottom of the furnace has a rammed lining of magnesite and tar which extends nearly to the top of the walls. The roof of the furnace is a fire-brick dome. The shaft is built in a steel shell which is hung by means of an octagonal ring from two steel beams which are supported on the walls of the furnace room. The shaft is lined with fire-brick and is provided with numerous holes for

[1] Met. and Chem. Eng. x, 1912, p. 686.

[2] T. D. Robertson, "Recent Progress in Electrical Iron-Smelting in Sweden," Trans. Am. Electrochem. Soc., vol. xx, 1911, p. 375.

[3] Reproduced from Mr. Robertson's paper.

the insertion of pyrometers; the whole plant being provided with every appliance for the exact observation of the operation of the furnace. The output of the furnace is about 23 tons of pig-iron daily.

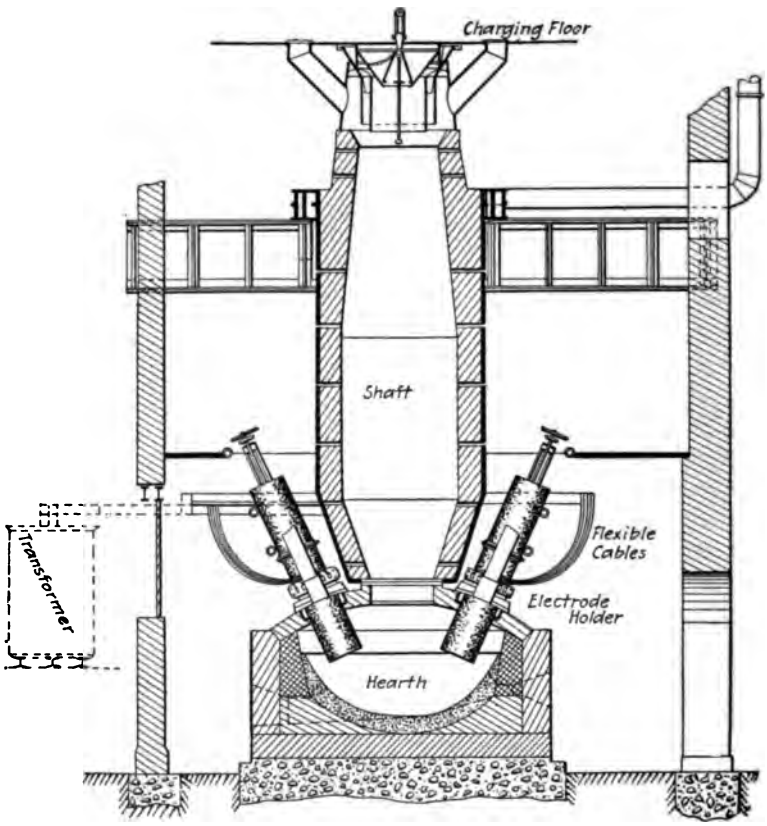

FIG. 92.—Trollhättan furnace.

Electrical Supply.—The electrical power is taken from the Government power station which furnishes three-phase 25-cycle current at 10,000 volts. The furnace is provided with four electrodes to operate with two-phase current; no doubt with the expectation of obtaining more uniform heating than if three-phase current were employed. The three-phase high-voltage supply is changed into two-phase current at a low voltage by means of two transformers arranged with the Scott connections. The arrangement is shown in Fig. 53. In

order to provide a considerable range of voltage in the furnace supply, the connections to the primary windings of the transformers can be changed by steps so as to vary the voltage of the secondary winding from 50 to 90 volts. The transformers supply, to the electrodes, a current of from 12,000 to 22,000 amperes on each phase.

Results Obtained.—The furnace was started in November, 1910. The first report of this furnace[1] was made after it had been in operation for about six months and the behavior of the furnace had been entirely satisfactory during that time. The efficiency had been better than that of the Domnarfvet furnace and showed a production of pig-iron as large as three tons per horse-power-year, although the average was somewhat less than that. The amount of fuel employed was about 1/3 ton per ton of pig-iron and the net consumption of electrodes was about 10 lb. per ton of pig-iron. The thermal efficiency was stated to be 80 per cent. The average output of the furnace was 13 tons per day with an average power of 1,344 kw. More recent information shows a better efficiency than was obtained at that time, the best production being as much as 4 tons of pig-iron per horse-power-year, which is very nearly as large as one would expect such a furnace to make. The earlier electrodes were made by clamping together four small electrodes 13 in. square, and with these electrodes there was a considerable waste due to the unused ends when the electrodes became too short for further use. Using round electrodes with threaded joints, this waste of short ends is avoided as the electrodes are fed continuously into the furnace. With the old electrodes, moreover, the electrical connection was made through the holder at the head of the electrode, while with the round electrodes the electric current is led in through holders which are close to the arch of the furnace. This arrangement saves a considerable amount of power and incidentally allows of the furnace being supplied with 3,000 h.p. instead of 2,500 as was originally expected. The furnace is provided like the Domnarfvet furnace with an arrangement for the circulation of the gases. More elaborate provision has been made for removing the dust by means of dust-catchers and water-scrubbers, because the dust in these gases was harmful to the fans used for circulation. In the equipment of the present furnace a reserve fan has been installed to permit of repairs. In connection with the gas circulation it is of interest to observe that this has a bad effect on the electrodes; the gases returned to the hearth contain a notable

[1] T. D. Robertson, *loc. cit.*

proportion, as much as 30 per cent., of carbon dioxide, and this oxidizes and corrodes the carbon electrodes between the roof and the charge in the furnace. This corrosion necessitates a somewhat more frequent feeding of the electrodes which might otherwise be completely cut in two.

At the time of this report the following furnaces were in operation or in course of erection in Norway and Sweden:

Sweden Trollhätten, 1 furnace	3,000 h.p.
Sweden Domnarfvet, 1 furnace	4,000 h.p.
Sweden Hagfors, 2 furnaces (3,000 h.p. each)	6,000 h.p.
Norway Tyssedahl (Hardanger), 2 furnaces (3,500 h.p. each)	7,000 h.p.
Norway Arendal, 2 furnaces (2,500 h.p. each)	5,000 h.p.
	25,000 h.p.

In newer furnaces three-phase current and six electrodes are employed, and furnaces of 5,000 h.p. and even 7,500 h.p. are now in course of construction.

A report of the Trollhätten furnace has been made by A. Leffler and E. Nystrom,[1] and covers the period from August 4, 1911, to March 6, 1912. During this period of 215 days, 3,214 metric tons of iron were produced, that is 15 tons daily, with an average power of 1,482 kw. The furnace was inactive during 7 per cent. of the time, which would indicate an output of 16 tons daily during regular operation. The consumption of electrical energy was 2,225 kw.-hours, or 0.34 E.H.P. year per ton of pig-iron. The consumption of fuel (charcoal with a little coke) was 0.407 ton, per ton of pig-iron, and the electrode consumption was 5.72 kg. (12.5 lb.) per ton of pig-iron. The circulated gases contained 23.5 per cent. CO_2, 63 per cent. CO, 10.3 per cent. H_2 and 1.5 per cent. N_2. The analyses of the pig-iron show the carbon usually between 3.3 per cent. and 3.7 per cent., the sulphur usually under 0.01 per cent., and phosphorus usually between 0.01 per cent. and 0.02 per cent. The silicon is very variable, running for two months from 0.1 per cent. to 0.5 per cent. but at other times as high as 6 per cent.

ELECTRIC FURNACE DESIGN

The electric shaft-furnace for the smelting of iron-ores appears to have arrived at a fairly definite type in the Swedish furnace. The

[1] Neumann, Eisen und Stahl. Iron Age, Nov. 28, 1912, p. 1297.

special features of this furnace are the enlarged hearth, allowing of the entrance of electrodes, and the circulation of the gases for heating the charge in the shaft. With regard to these features it may be pointed out firstly that a shaft furnace can be constructed either after this pattern or with a central electrode, or group of electrodes, smelting ore furnished by a number of lateral shafts. This latter type is suggested in the Haanel-Héroult furnace, Fig. 81. The introduction in such a furnace of the ore from the sides would appear to favor the economy of heat in the smelting region, but on the other hand the maintenance of the roof in such a furnace must be more difficult, and it seems probable that except for special purposes the Swedish would be found the better.

With regard to the circulation of the gases, while these serve the useful purpose of heating the charge and of cooling the arch of the furnace, it must be remembered that they remove heat from the smelting chamber, where it should be economized, and that on account of the carbon dioxide present they serve to corrode the electrodes and also no doubt to consume some of the carbon from the charge in the hearth and lower part of the shaft. The preheating of the charge in the shaft can be effected more economically by means of the calorific power of the gases escaping from the furnace than by circulating them as in the Swedish furnace. There are, however, practical difficulties in the way of carrying this out. One method is to heat the charge by conduction through the walls of retorts, preferably vertical, and this method has been adopted in the Evans-Stansfield furnace for the direct production of Steel (see Fig. 110). Another method is that referred to on page 196, and patented by Paul Héroult, of introducing the carbon toward the lower end of the shaft and burning the gases higher up in the shaft by the introduction of air.

CHAPTER VIII

THE PRODUCTION OF STEEL FROM METALLIC INGREDIENTS

Although steel can be produced directly from iron-ore, it is almost universally made from pig-iron or wrought-iron.

Tool steel is made from wrought-iron by melting it in crucibles with sufficient charcoal to produce the desired percentage of carbon in the resulting steel. In Sheffield practice, steel is made by heating bars of wrought-iron packed in charcoal. The resulting "blister steel" is then melted in crucibles.

Steel is far more commonly made, however, by removing some of the carbon and other impurities from pig-iron. This is effected either by blowing air through the molten pig-iron as in the Bessemer converter or by adding iron-ore and steel scrap to the molten pig-iron as in the open-hearth furnace. In the first case the heat of the reaction is sufficient to keep the metal melted during the operation, but in the second case the furnace is heated by means of gas. In making steel by the Bessemer process the carbon is completely removed from the pig-iron and the necessary amount of carbon, manganese, etc., is added in the ladle at the end of the operation. In the open-hearth process it is sometimes possible to stop the operation when the metal contains the desired amount of carbon, but it is frequently necessary to remove nearly the whole of the carbon and then to add the required amount. In making steel by either process the elimination of sulphur and phosphorus has to be considered. Some varieties of pig-iron are sufficiently free from these elements, and then the operation can be carried out in a furnace having a siliceous lining; silica being the cheapest and most satisfactory material available. When using varieties of pig iron which contain more phosphorus than is permissible in the resulting steel, it is necessary to use a furnace, whether the Bessemer converter, or the open-hearth furnace, which is lined with a basic material such as dolomite or magnesite. In such a furnace the phosphorus can be eliminated in the presence of a slag very rich in lime, and it is also possible to remove any excess of sulphur from the steel, although the pig-iron employed should be, in any case, nearly free from this substance.

In open-hearth practice the materials charged are pig-iron, steel scrap, and iron-ore, together with lime and other materials needed for effecting the refining of the steel. Pig-iron may be charged cold, but in modern practice it is frequently brought from the blast-furnace to the open-hearth furnace in a molten condition, thus saving the expense of molding and remelting.

THE ELECTRICAL PRODUCTION OF STEEL

The electrical production of steel from metallic ingredients is accomplished in furnaces which resemble in their action the open-hearth furnace or the crucible furnace. Some of these, like the crucible furnace, are used for the fusion of suitable pure materials in the proportions required for making steel; these materials would be pure varieties of pig-iron, and wrought-iron or mild steel. Other electrical furnaces, however, are employed for melting together pig-iron, scrap-steel and ore, as in the open-hearth furnace, and are almost always made with a basic lining so as to allow of the removal of phosphorus and sulphur from the steel by means of a limey slag. Electric furnaces are also employed, and this is one of the most important of their uses, for finishing and refining steel that has been made in the Bessemer or open-hearth furnace.

The furnaces used for steel-making are of three types: Arc-furnaces, Induction furnaces and Resistance furnaces. There are two kinds of arc-furnaces, the series-arc furnace, Fig. 12, and the single-arc furnace, Fig. 11. In the first kind, exemplified by the Héroult furnace, two carbon electrodes enter through the roof of the furnace, and the electric current passes down through one of these, enters the slag and metal in the furnace, and returns by the other electrode; an electric arc being maintained between the end of each electrode and the molten slag and metal. The hearth of the furnace is made of burnt magnesite or similar material.

In the second kind of furnace, typically the Girod furnace, there may be only one electrode passing through the roof of the furnace, and the electric current, which enters by this electrode, passes out through the hearth of the furnace. For this purpose the hearth must be an electric conductor, and this is accomplished, in the Girod furnace, by inserting in the hearth a number of vertical steel bars which are in contact at their upper ends with the molten metal in the furnace, and are water-cooled at their lower ends where they make contact with the electric conductors.

Induction furnaces have no electrodes at all, but the molten steel is in the form of a ring, and an electric current is induced in this ring of molten steel, in the same way as in the secondary winding of the ordinary electric transformer.

Resistance furnaces for making steel have been constructed by Mr. Gin who used a long folded channel containing the molten metal, which is heated by a large electric current introduced by means of water-cooled electrodes at the two ends of the channel.

SERIES-ARC FURNACES

The Héroult furnace is the best-known example of a series-arc furnace applied to steel-making. This furnace was described by Dr. Haanel in 1904, and an account will first be given of the small furnaces in operation at that time.

The Héroult steel furnace, Fig. 93,[1] resembles a Wellman tilting, open-hearth furnace, from which the gas and air ports have been removed, and with the addition of two vertical carbon electrodes, *CC*. The furnace is heated by two electric arcs, one between each electrode and the slag or melted metal beneath it. The current passes down one electrode, through the metal and up the other electrode.

The lining of the furnace is constructed of dolomite bricks, *B*, and crushed dolomite, *L*. A is the roof, made of silica-brick, and *M* is the molten steel, which is covered with a layer of slag *S*, as in the ordinary gas-fired furnace. The furnace is built in a steel case or jacket, and, unlike the open-hearth furnace, the roof, *A*, is also covered with steel plates, *E*, and is provided with eyes, not shown in the figure, by which it may be lifted off the furnace. The weakest part of the roof is around each electrode, and this part has been strengthened by water-jackets, *J*, which enable a closer fit to be maintained round the electrode, and so reduce the loss of heat and prevent the exposed parts of the electrodes from becoming red hot, and wasting in the air. As an alternating current is used, it is not desirable to have iron or steel plates on the part of the roof between the electrodes *CC*, as this would increase the inductance of the electric circuit and lower the power-factor of the furnace; bronze plates, *F*, are therefore used to cover this part of the roof. The charging doors, *DD*, in this furnace are placed at the ends. The electrodes are square in cross-section, and are vertical when the furnace is upright, but on account of the tilting motion of the latter, they cannot be suspended as in the ore-

[1] European Commission Report, 1904, Fig. 4.

smelting furnaces, but are held in adjustable holders, Fig. 47, which are supported by the furnace, so that the height of each electrode in the furnace is unaffected by the tilting movement. The lower end of each is kept a short distance above the slag, leaving a space for the electric arc, and the current is regulated by raising or lowering the electrodes. This adjustment is effected by automatic machinery controlled by the voltage of the furnace; and in order that the two arcs may be kept equal, each electrode is operated separately, being controlled by the voltage between itself and the metal in the furnace.

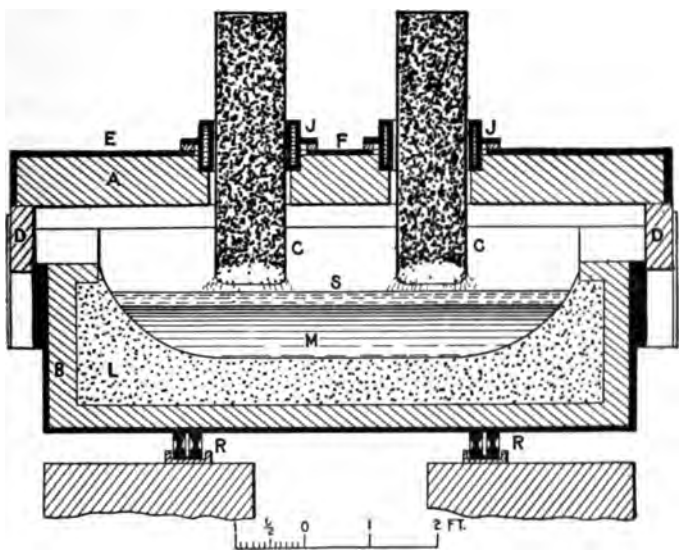

FIG. 93.—Héroult steel furnace.

The hearth is lined with dolomite or magnesite, either of which has the advantage of being more refractory than silica-brick, and of allowing strongly basic slags to be used for removing phosphorus and sulphur from the steel.

The Héroult furnace is very much smaller than the usual open-hearth furnace, the one at La Praz being about 7 ft. by 4 ft., internally, and taking a charge of only 3 tons, while the furnace at Kortfors was a little larger than this. For products like crucible steel the small size of the electric furnace may be no disadvantage, but when it is desired to turn out structural or rail-steel, larger furnaces have to be employed to compete with the 50-ton open-hearth furnace.

The Haanel Commission saw the process of making both low- and high-carbon steel in the furnace at La Praz,[1] by melting miscellaneous steel scrap, purifying it by repeated additions of iron-ore and lime, and then making suitable additions to obtain the required percentage of carbon, manganese and silicon. The scrap contained 0.055 per cent. of sulphur and 0.22 per cent. of phosphorus, while the final steel contained only 0.02 per cent. of sulphur and 0.009 per cent. of phosphorus, the carbon being 0.08 per cent. and 1.0 per cent. in the two steels. The scrap was melted with some ore and lime, and when fusion was complete the slag was poured off and a second slag was made by adding lime with a little sand and fluor-spar as fluxes. The second slag was poured off and a third slag made in the same way before the final additions were made to the steel. The steel is more completely purified in this way, by the repeated addition of fresh slag-forming materials, than if the whole amount were added at once. In making the low-carbon steel some ferro-manganese was added in the furnace and a little aluminium in the ladle, while in making the high-carbon steel there was also added in the furnace some "carburite," which is a mixture of iron and carbon, and some ferro-silicon.

The electrical power employed[2] was about 350 kw. in each operation; the voltage was 110, and the current, which was not measured, would probably be about 4,000 amperes. The electrical energy per ton of steel was 0.17 h.p. years.[3] The time required was 5 hours for a small charge of 1.25 tons of low-carbon steel, and eight hours for 2.33 tons of high-carbon steel. During the first part of the operation, before the steel scrap is melted, the current fluctuates violently and is regulated by hand; but after the steel has melted around the electrodes the current becomes more steady, heating by an arc beneath each electrode, and automatic regulation can be employed. The full power was not applied until about an hour after the start. Mr. Harbord states[4] that the high-carbon steel is as good as corresponding grades of crucible steel, and there appears to be no reason why, in localities where water-power is cheap, this furnace should not replace the crucible furnace and open-hearth furnace for the manufacture of tool steels and other special varieties

[1] European Commission Report, pp. 70–72, charges 658 and 660.

[2] European Commission Report, pp. 53-55, charges 658 and 660.

[3] Better results have been obtained more recently, see Table XVI. The long ton of 2,240 lb. is employed in this chapter.

[4] European Report, pp. 85–89, and p. 115.

of steel in which quality rather than quantity or cheapness is aimed at.

More recent data with regard to the operation of the Héroult steel furnace are given by Professor Eichhoff, of Charlottenburg.[1] He furnishes a number of figures for the output and power consumption of Héroult furnaces, from which the following may be quoted:

TABLE XVI.—OPERATION OF 5-TON HÉROULT FURNACE

	Generator capacity			Length of heat	kw.-hr. per ton
With cold charge	750-kw.	Drawing slag.	once.....	6.05 hr.	725
			twice....	6.63 hr.	795
			thrice...	7.22 hr.	868
With hot[2] charge	643-kw.	With only one slag.....		2.08 hr.	219
		Drawing slag.	once.....	2.57 hr.	265
			twice....	3.15 hr.	324

With regard to the possibility of making structural steel in the Héroult furnace, it should be remembered that the material of the charge would be largely pig-iron and ore, as there would not be sufficient scrap available, and this would increase the time and electrical energy required for the operation. On the other hand the pig-iron could be charged molten, and the purification of the metal need not be carried so far as was necessary for tool steel, while the larger scale of the furnace would also reduce the consumption of electrical energy per ton of product. A 50-ton furnace might be expected to require, with a cold charge, about 5,000 kw., or about 50,000 amperes at 110 volts; while 40,000 amperes might be sufficient if molten pig-iron were used.

The cost of making structural steel in a 50-ton Héroult furnace, if a furnace of this size could be successfully operated, would probably, with electrical energy at $10 a horse-power year, be about the same as in a gas-fired open-hearth furnace using coal at $3 a ton. Assuming that the general cost of operating the two furnaces was the same, there remains for the Héroult electric furnace the cost of electric energy, which, at 0.10 horse-power years per ton would be $1 per ton, and the cost of electrodes, which are stated to cost 20 cents per ton; while for the open-hearth furnace there is the cost of coal, which at 700 lb. per ton would be $1 and the cost of operating

[1] Stahl und Eisen, 1907, No. 2, pp. 50–58, and Dr. Haanel's 1907 Report, pp. 139–146.

[2] Molten steel from the open-hearth furnace.

the gas producers and checker chambers, which would more than balance the cost of electrodes. Until larger furnaces have been built, it is not worth while to attempt to estimate in detail the cost of operating them, but the figures given are enough to show that under favorable conditions, large electric furnaces might be expected to compete with gas-fired furnaces for the manufacture of structural steel.

A Héroult furnace for the production of 50 tons of steel a day was installed in the plant of the Halcomb Steel Co., in Syracuse. The furnace is used in conjunction with gas-fired furnaces, and is charged with molten superoxidized steel from a Wellman furnace, the operation of refining being completed in the electric furnace.

An illustrated description of such a plant appeared in the Electrochemical Industry, vol. v, p. 272, from which the following particulars are taken: The steel is made from scrap, etc., in a Wellman open-hearth furnace holding 25 tons. The operation is carried further than in ordinary open-hearth practice, until the carbon and phosphorus have been almost entirely eliminated; the removal of the sulphur and oxygen and the recarburization of the steel being effected in the Héroult furnace. Four tons of highly oxidized metal from the open-hearth furnace are transferred to the electric furnace, which requires one and one-half hours to finish this charge of steel, and has a daily output of 60 tons. At the high temperature of the electric furnace very basic slags can be used which will remove very thoroughly any sulphur remaining in the steel, and in the neutral atmosphere of this furnace the steel can be deoxidized far more completely than is possible in open-hearth practice, the slag on the molten steel becoming quite neutral or free from iron oxide. Such steel will be more sound than the usual open-hearth product. The location of the plant is not specified, and no figures are given for the amount of power employed.

The uses of the Héroult steel furnace may be stated as follows:

(a) The production of tool-steel and other high-grade steels by melting pure materials just as in the crucible process. Electric-furnace steel is less expensive than crucible-steel, and is also sounder and more tough.

(b) The production of high-grade steel from less pure materials by keeping them in a molten condition beneath oxidizing slags which are repeatedly changed until all the impurities are removed. In this process the pig-iron which forms a part of the charge will preferably be supplied from the blast-furnace in the molten state.

(c) The electric furnace may be used for finishing steel which has been practically freed from carbon and phosphorus in the Bessemer or open-hearth furnace.[1]

The following special features of this electric furnace may be noticed:

(a) The high temperature of the furnace, which enables very basic slags to be used.

(b) The ability to exclude the air and to finish the charge under slags which are practically free from oxide of iron, thus obtaining a sounder product.

(c) The slag is considerably hotter than the metal and will therefore be fluid enough to act freely on the metal without the latter being over-heated. With regard to the possible over-heating of the steel in electric furnaces nothing definite appears to be known, but it is considered that if steel is over-heated in the presence of basic slags it will absorb nitrogen and become less tough in consequence.[2] In the electric furnace, however, even nitrogen is largely excluded by the gases arising from the operation, as no air or other gas need be introduced from without.

(d) In the final or recarburizing stage in the electric furnace, the conditions are so strongly reducing and the temperature is so high that calcium carbide is formed in the slag. There is therefore practically no waste of the ferro-manganese or other metallic additions, which are of course made in the furnace itself and not in the ladle.

(e) The cost of the electric process is decidedly less than that of the crucible process, and special varieties of steel can be made commercially in the electric furnace, in places where cheap power can be obtained. The largest furnace which has been operated up to the present holds about 15 tons, and the number of kilowatt-hours per ton of steel produced in such a furnace varies from 800 or 900, when cold stock is employed and is purified by repeated treatments with fresh slags, to about 200 when it is merely required to finish a charge of steel from the open-hearth furnace.

Mr. Héroult[3] has proposed an electrically heated steel mixer of 300 or 400 tons capacity, to receive the steel from a number of open-

[1] See P. L. T. Héroult, U. S. Patent 807,026, Electrochem. Industry, vol. iv, p. 31, for converting pig-iron into high-grade steel by the Bessemer converter followed by the electric furnace.

[2] Jour. Iron and Steel Inst., 1905, No. 2, p. 777, and 1906, No. 4, p. 923.

[3] P. L. T. Héroult, U. S. patent 807,027, see Electrochem. Industry, vol. iv, 1906, p. 30.

hearth or Bessemer furnaces, thus ensuring a uniform product, and allowing a more perfect deoxidation of the steel and separation from the slag than by the usual process of casting. Prof. Richards has suggested the use of electrical heating as an auxiliary in an ordinary open-hearth furnace, for raising the temperature of the steel through the last 100° or 200° C. before tapping, as a little electrical heat for reaching the highest temperature would sometimes save a good deal of time and fuel.

Fifteen-ton Héroult Steel Furnace.—An important recent development of the Héroult furnace is a 15-ton furnace which has been in operation at South Chicago since May 7, 1908.[1]

This furnace, which is shown diagrammatically in Fig. 94 and in side view in Fig. 95,[2] is built in a steel shell and mounted on rockers for pouring. It is lined with magnesite brick, with an inner lining of magnesite mixed with one-fourth of its weight of open-hearth slag and tamped in with the addition of tar. The furnace is provided with three carbon electrodes, entering through holes in the roof, and is operated by means of three-phase current. The electrodes are held in water-cooled copper castings which move up and down, each being lifted by two chains passing over pulleys and actuated by an electric motor; the electrode-holders are guided by vertical rods. The regulation of the electrodes may be by hand, but is usually automatic by means of an electrical device actuated by a proportional part of the current passing to each electrode. The roof of the furnace is a 12-in. arch of silica-brick. The electrodes used have varied from 24 in. in diameter to about 11 in. square. The electrical power is supplied by 25-cycle three-phase generators, at 2,200 volts. It is stepped down at the furnace by three 750-kw. transformers giving a voltage of 80, 90, 100, or 110 volts by means of taps on the primary windings. Ninety volts are usually employed.

This furnace is generally used to finish steel which has been blown in the Bessemer converter. The steel is blown until the carbon, silicon, etc., are practically all removed. It is then brought in a ladle, the slag is skimmed off, and the metal is poured into the electric furnace. Lime and iron-ore are added to make a basic slag for the removal of the phosphorus which in the original metal is about 0.1 per cent. This slag is allowed to act on the metal for about half an hour, during which time the phosphorus is reduced to about 0.01 per cent. The removal of the phosphorus is effected

[1] C. G. Osborne, Trans. Am. Electrochem. Soc., vol. xix, 1911, p. 205.

[2] Reproduced from Mr. Osborne's paper.

by the oxidizing action of the iron-ore, and the lime is needed to combine with the oxidized phosphorus and retain it in the slag. The furnace is then tilted slightly and the slag is raked out, thus getting rid of the phosphorus. A fresh slag is made by adding lime and fluor-spar. Powdered coke is then added around the elec-

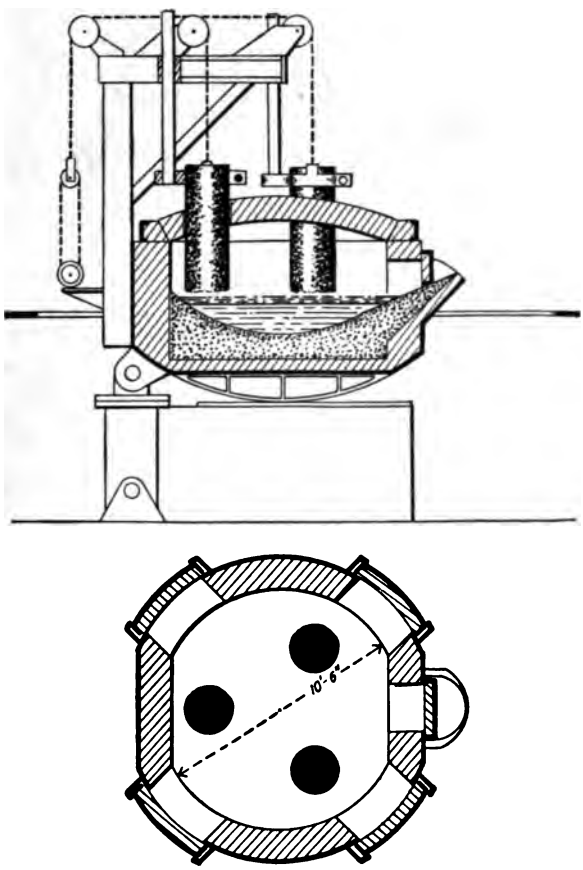

FIG. 94.—15-ton Héroult furnace.

trodes and the carbon of the coke combines with the lime in the slag, forming calcium carbide. The calcium carbide reacts with the sulphur in the steel, forming calcium sulphide which passes into the slag, so in this way both the phosphorus and the sulphur are very completely eliminated. This second stage of the process also serves to remove from the steel a large quantity of oxygen or oxide of iron which was dissolved in it, and which could not be allowed to

remain in the finished metal. After the sulphur and oxygen have been removed, suitable amounts of ferro-silicon, ferro-manganese and recarbonizer are added for the purpose of introducing into the steel, the necessary amount of manganese, silicon, and carbon. The furnace is then tilted, pouring the metal into a ladle from which it is run into molds through an opening in the bottom of the ladle.

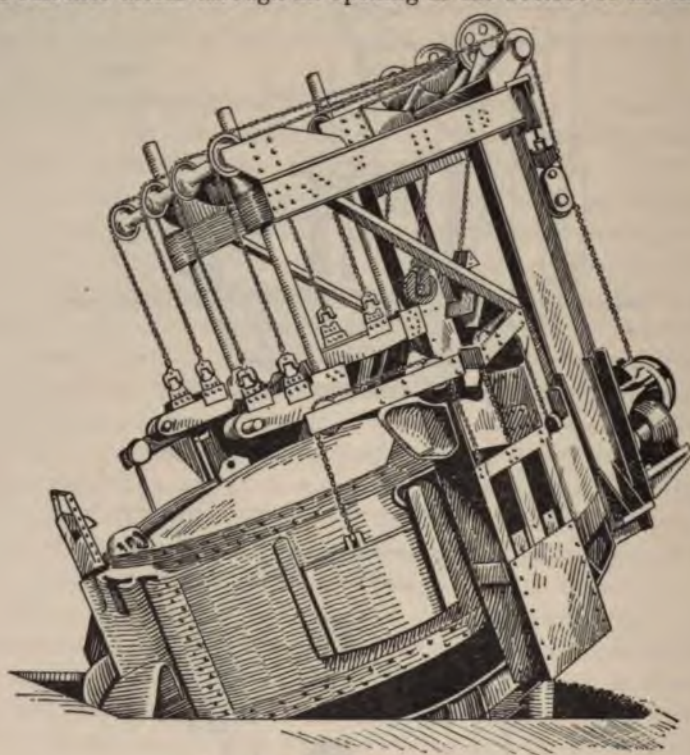

FIG. 95.—15-ton furnace tilted.

It may be added that in order to remove the phosphorus the carbon in the steel must be very low, hence the need of recarbonizer to impart the necessary carbon to the steel. The whole time taken by this operation varies from one and one-half to two hours according to the grade of steel required.

The power supplied to the furnace may be as much as 2,000 kw., although it is found that the operation of keeping molten steel without loss of heat in the furnace only requires about 750 kw. The current supplied to each electrode when using 2,000 kw. at 90 volts, assuming a power factor of 0.85, would be 15,000 amperes

per electrode. To calculate the diameter of a round carbon electrode for this current, by Hering's method, we must make certain assumptions. The author considers that it will be satisfactory to measure the electrode from the holder to a point just inside the roof, assuming the temperature of the electrode at that point to be that of the furnace, say 1,500° C. Another method, perhaps equally correct, is to measure from the holder to the lower end of the electrode, and to take the temperature of the electrode at that point as that of the electric arc, 3,500° C. In the furnace shown in Fig. 94 the lengths are 3 ft. to a point just inside the roof, and 5 ft. to the lower end of the electrode, and the corresponding diameters of carbon electrodes are found to be 20.2 in. and 20.3 in.[1] In addition to water-cooling the electrode-holders, a water-cooled collar is placed on the roof immediately around each electrode! This serves to cool the electrode and to prevent the exposed portion from becoming red hot. The collars also assist in keeping the furnace roof air-tight. The amount of electrical energy employed for refining 1 ton of steel is not stated, but must be in the order of 300 kw.-hours.

This furnace has been in operation for a considerable time and has been used to make all kinds of steel, both high- and low-carbon, as well as special alloy steels.

The electric furnace is better than the open-hearth furnace for the production of steel that is very low in phosphorus and sulphur. In addition to this it is found that electric-furnace steel is better mechanically than steel of similar composition made in the open-hearth furnace. This superiority appears to depend on the greater freedom from oxides and the greater density of the electric-furnace steel.

The Keller furnace,[2] Fig. 96, is a series-arc furnace having four electrodes. The furnace is supported on a train of rollers and can be tilted, like the Campbell open-hearth furnace, by means of an hydraulic ram. The electrode holders are not attached to the furnace, but are suspended from independent supports, and the furnace cannot be tilted until the electrodes have been withdrawn The system for supporting the electrodes is shown in the figure.

Each electrode hangs from the end of a hinged arm, *A*, and two of

[1] The electrodes are actually somewhat larger than this, 24 inches for instance, because large electrodes convey the heat of the arc to the metal better than small ones, protecting the roof from radiation, and are less subject to accident.

[2] C. A. Keller, "A Contribution to the Study of Electric Furnaces as applied to the Manufacture of Iron and Steel," Trans. Am. Electrochem. Soc., xv, 1909, p. 110.

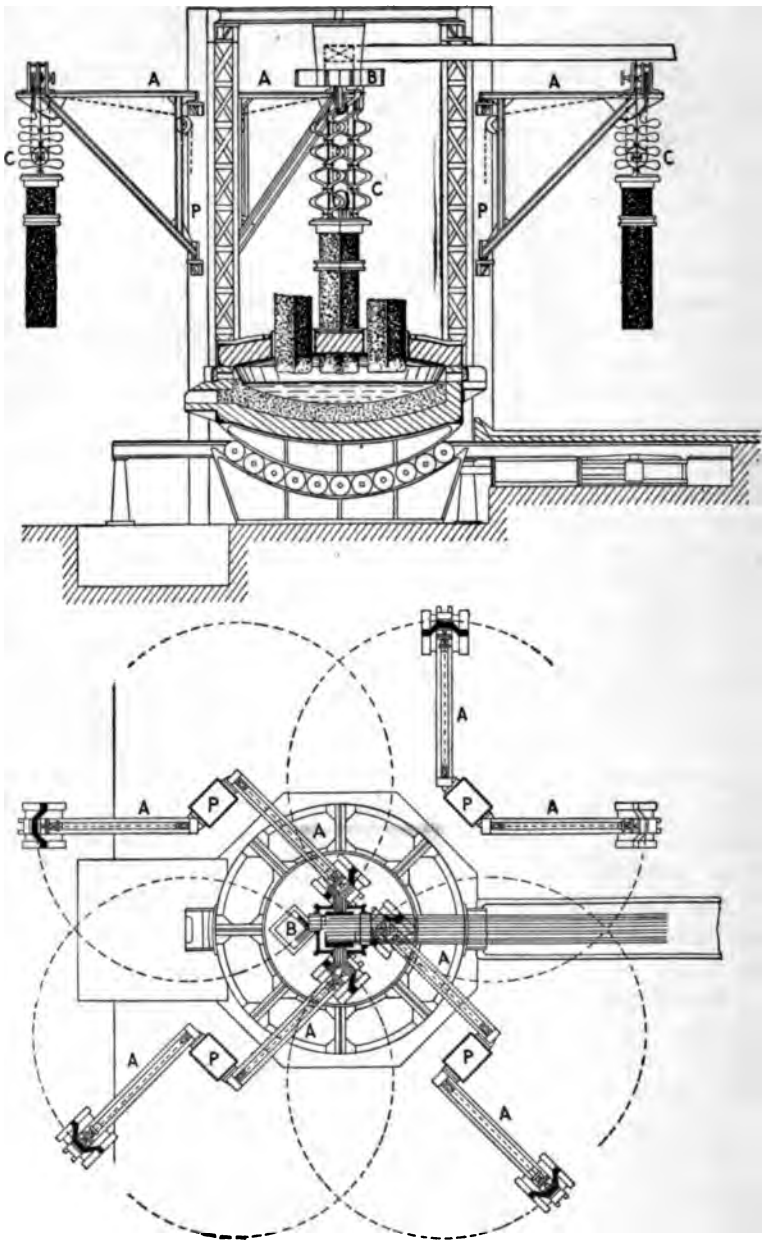

FIG. 96.—Keller steel furnace.

these arms are supported on each of the four pillars *PP*. There are thus eight electrodes, of which four are in use at once and the other four are ready to replace these as they become too short for further use. To replace an electrode it is lifted up to clear the furnace, swung out of the way and a fresh electrode swung over the furnace and lowered into position. Electrical connection with the electrode holder is made by the flexible metallic conductors, *CC*, which fold up when the electrode is raised; a vertical rod, serving to keep them in place. Electrical connection to these conductors is made by a fixed system of bus-bars, *B*, with which each electrode arm engages when it is swung into position. The electrodes are therefore automatically disconnected from the electrical supply when removed from the furnace for changing. The four-electrode furnace shown, having two pairs of series-arcs, has nearly perfect symmetry of heating. It has also the advantage that the electrical supply bus-bars, being all brought to the same point, can be thoroughly interlaced and thus the inductance of the system can be kept low and a power factor can be as high as 0.97 with 12,000 amperes.

In the four-electrode Keller furnace simple alternating current is used, and each electrode must be in correct adjustment in order to maintain the right voltage in the furnace, to equalize the voltage in the arcs which are in series, and to equalize the current in the electrodes. This is accomplished by hydraulic control of the electrodes. They can be lifted or lowered individually or in certain combinations. It would probably be better to use two-phase current, each phase being supplied to a pair of electrodes situated at opposite corners of a square. Mr. Keller suggests the use of three-phase current using three or six electrodes.

The furnace is used to finish steel which has been made in the open-hearth furnace. A charge of 7.5 tons of steel containing 0.15 per cent. carbon, 0.06 per cent. sulphur, and 0.007 per cent. phosphorus, required two hours 45 minutes in the furnace with an average power of 750 kw., yielding a steel having 0.443 per cent. carbon, 0.009 per cent. sulphur and 0.008 per cent. phosphorus. The energy consumed per ton was 275 kw.-hours. The electrode loss was about 26 lb. costing 80 cents per ton of steel. This figure does not apparently include the cost of the waste ends and should probably be somewhat higher.

SINGLE-ARC OR CONDUCTING-HEARTH FURNACES

Girod Electric Steel Furnace.—Paul Girod started electric smelting in 1898 with a plant of 28 h.p. making ferro-alloys. This

industry grew so rapidly that by 1904 the "Société Anonyme Electrométallurgique, Procédés Paul Girod" had three large plants in Switzerland and Austria making ferro-alloys (see page 269). Girod then started the manufacture of steel in the electric furnace, using at first a resistance furnace in which he produced crucible steel. Subsequently he designed the type of furnace which now bears his name.[1] This furnace, Figs. 97 and 98, is an arc-furnace having one or more depending carbon electrodes, which are all of one polarity; the opposing electrodes being a number of vertical steel bars passing through the bottom of the furnace. The furnace is usually square in section with rounded corners, and in the smallest sizes is circular in plan. It consists of an iron or steel casing lined with refractory materials, usually magnesite or dolomite, either as bricks or in the form of a rammed lining. The cover of the furnace is made of silica-bricks and can be lifted off. The steel rods or electrodes in the bottom of the furnace make electrical connection with the molten steel in the furnace. They are surrounded by the lining-material so that although the upper few inches may melt, the rods remain in place. The lower ends of the rods, which are secured to the iron case of the furnace, are water-cooled and connected to the electrical supply. The furnace usually rests on a train of rollers and is tilted for pouring by means of a lever operated by a hydraulic ram. The furnace has one or more working doors and a spout. A small furnace of about 2 tons' capacity has one carbon electrode entering through the roof. In larger furnaces four carbon electrodes are used which are all connected in parallel to the same pole of the electric supply. The holders of these carbons are attached to standards which are supported on the furnace so that the carbon electrodes tilt with the furnace. Cast-iron water-cooled collars are placed around the electrodes where they enter the roof of the furnace in order to make a tighter joint at this point and to prevent the external portions of the electrodes becoming red hot and wasting in the air.

Comparing this furnace with a series-arc furnace like that of Héroult, the Girod furnace is simpler in operation, particularly in the smaller sizes where only one carbon electrode is employed. In starting such a furnace, there is only one electrode to be regulated according as the current is too large or too small, while in the series-arc furnace there are two electrodes to regulate and it is essential that the right electrode should be moved when regulation is required. In starting a Girod furnace with a cold charge of scrap-

[1] Patented 1905. See Trans. Am. Electrochem. Soc., vol. xv, p. 92.

iron, the electric current passes through the whole mass of material and heats this by small arcs at all the poor contacts throughout the mass.

The Girod furnace can also be made more symmetrical in shape than the usual series-arc furnace, although the same symmetry has been obtained by Keller in a series-arc furnace having four electrodes. The Girod furnace has, however, the complication of having a composite hearth.

The early forms of Girod furnace had a voltage of 50, about half that of a series-arc furnace, and this meant that for the same power twice as large an electric current must be employed, thus increasing the losses of power in the cables and connections and in the electrodes themselves. In some larger furnaces, built more recently, a voltage of 75 has been obtained, which leaves little to be desired. It might appear that the steel rods in the bottom of the furnace would chill the molten steel, especially as the rods are water-cooled; but if the rods are properly proportioned to the current they have to carry, no such chilling action will take place as long as the current is flowing, and under these conditions less energy is wasted by these than by carbon electrodes. Whenever the current is shut off for any reason, there will, of course, be a loss of heat through the steel rods. Paul Girod speaks of the "thorough electrification" of the steel as being one advantage of his furnace. This means that the electric current passes right down through the steel instead of merely skimming the surface, as it might be expected to do, in a series-arc furnace. It is not likely that the passage of the current through the main body of the steel would produce enough heat to improve materially the working of the furnace, but heat will be produced at the points where the current enters the vertical steel rods, as in the Hering furnace, and this may be sufficient to cause a circulation of the steel in the furnace. A serious objection to this form of furnace is the fact that the electric current passes completely through the steel ring forming the walls of the furnace and this increases the inductance of the furnace and lowers the power-factor in a way that does not occur in a series-arc furncae. The difficulty can be got over in part by inserting strips of copper down the sides of the furnace, but this complicates the construction and the operation of the furnace.

A 12-ton furnace described by Borchers,[1] and shown in Figs. 97 and 98, is about 12 ft. square and 5 ft. high outside. Inside it is 10

[1] W. Borchers, "The Girod Furnace," Jour. Iron and Steel Inst., 1910, No. 1, p. 141.

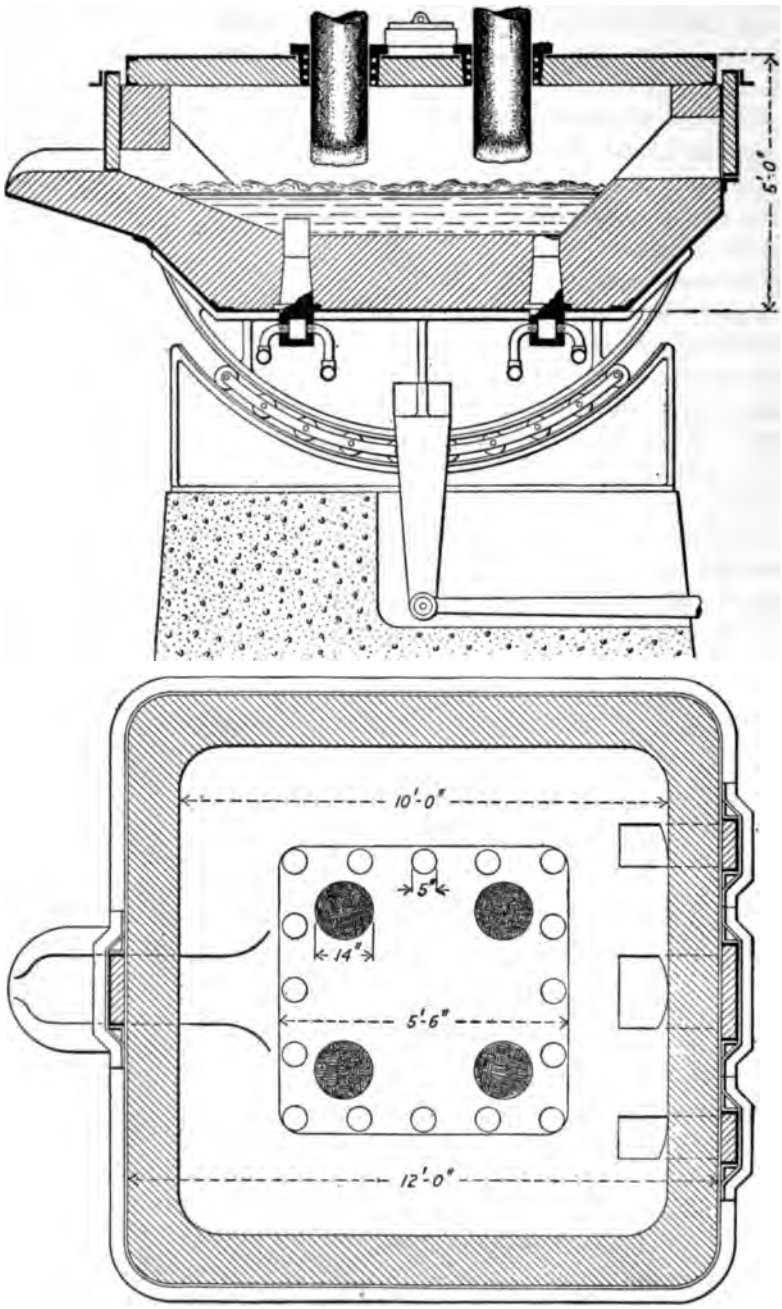

FIG. 97.—Girod steel furnace.

ft. square at the top, 5 ft. 6 in. at the bottom and 3 ft. high. The bottom is 20 in. thick, the sides 12 in. and the roof 8 in. It has four round carbon electrodes, 14 in. in diameter, which are all coupled in parallel to the same pole of the electrical supply, and 16 steel rods which are coupled in parallel to the other pole of the electrical supply. These rods are 5 in. in diameter at their upper ends and 7 in. at their lower ends, where they are water-cooled. They originally project

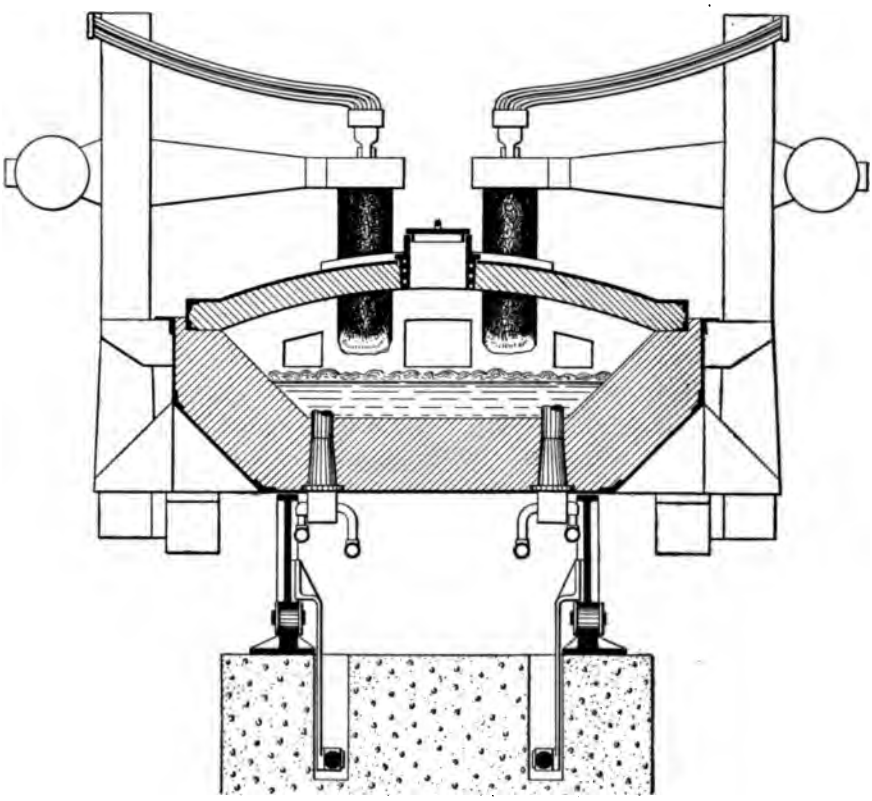

FIG. 98.—Girod steel furnace.

above the hearth as shown in one figure, but melt away to the depth of a few inches when the furnace is in operation. The furnace uses 1,000 to 1,200 kw. at 70 to 75 volts. This corresponds to a current of about 17,000 amperes, or a little over 4,000 amperes for each carbon electrode and 1,000 amperes for each steel rod. This gives a current density of 30 amperes per square inch in the carbon and 50 amperes per square inch in the steel rods. A calculation shows that the mini-

mum electrode loss would be obtained with carbon rods about 10 in. in diameter and steel rods about 1.5 in. in diameter. In furnaces of the Girod and Héroult types it is usual to make the carbon electrodes considerably larger than is required by theory, in order to make provision for wasting and to cover the arc with the end of the electrode, thus protecting the roof from the radiated heat. The steel rods might apparently be made smaller, but they would then be more liable to be covered up during the patching of the furnace.

In making steel from cold stock in this furnace, 1 ton of steel requires from 800 to 900 kw.-hours; the consumption of electrodes is about 13 lb. per ton; the lining of calcined dolomite will last for 80 charges before any repairs are needed. The bottom will last from 120 to 150 charges, during which time it wears down about 4 in. The cover of the furnace lasts for about 25 charges. The cost of the lining varies from 80 cents to $1 per ton of steel, the additions such as lime, ore, fluor-spar and ferro-alloys cost from 60 cents to $1.40 per ton of steel, and three men and a boy are required to operate a furnace of this size. The cost of electrodes is $1 per ton of steel.

The following Girod furnaces are in use in Europe:[1]

At the Ugine works, France, two 12-ton and three 2-ton furnaces; at Rive-de-Gier, France, one 5-ton furnace; in Switzerland, one 2-ton furnace; in Belgium, one 3-ton furnace; in Germany, one 2-ton furnace; in Austria, one 3-ton, one 1.5-ton and one 1/2-ton furnace. W. Leavitt & Co., New York, agents for this furnace, are prepared to guarantee the operation of a 25-ton furnace.

The following are recent papers describing the Girod furnace: "The Girod Electric Furnace for the Manufacture of Steel," by Paul Girod. Trans. Amer. Electrochem. Soc., vol. xv (1909), p. 127, and Met. and Chem. Eng., vol. vii (1909), p. 259. "The Girod Furnace," by W. Borchers, Jour. Iron and Steel Inst., No. 1, 1910, p. 141, and Met. and Chem. Eng., vol. viii (1910), p. 421.

Keller Steel Furnace.[2]—Charles Albert Keller, who is the managing director of the "Société des Etablissements Keller Leleux," Livet Works, Isère, France, has produced a furnace similar to that of Girod but having a composite bottom made by fixing a large number of slender vertical iron rods into an iron plate, and ramming lining material between these rods. This bottom appears to be perfectly satisfactory and may offer certain advantages as compared with

[1] P. Girod, Electrochemical Industry, vol. vii (1909), p. 259.

[2] C. A. Keller, "A Study of Electric Furnaces," etc., Trans. Am. Electrochem. Soc., xv, 1909, p. 97.

that of the Girod furnace, although it would be difficult to judge of their relative merits without an extended acquaintance with the operation of both of these furnaces. A Keller furnace having this type of conducting hearth is shown in Fig. 99. The hearth is made by fastening into a metal base plate a number of iron rods about 1 in. or 1.25 in. in diameter and about 2 ft. long. The rods are spaced their own diameter apart and a refractory material, usually burnt magnesite agglomerated with tar or pitch, is rammed in hot between the rods. This forms a very strong composite hearth which is conducting when cold on account of the iron rods, and when hot the upper part of the magnesite will itself become a conductor. The remarks made with regard to the Girod hearth apply equally to the Keller hearth. A conducting hearth will tend to give more uniform heating of the charge, but in general will be worked at a lower voltage and will therefore take a larger current for the same power, thus entailing larger electrical losses in the conductors. The electrode holders for this furnace are supported in the same manner as in the series-arc Keller furnace, Fig. 96. The furnace can be operated with poly-phase current, using the conducting hearth as a common return.

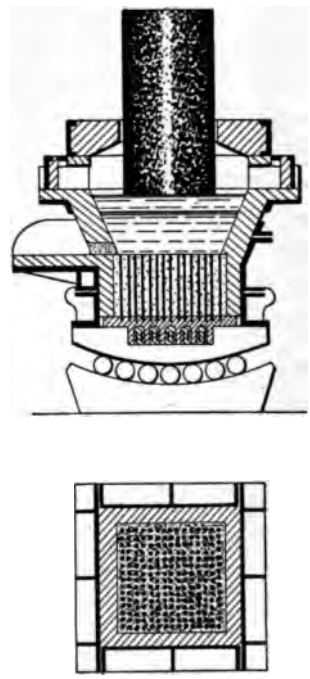

FIG. 99.—Keller steel furnace.

"Electro-Metals" Steel Furnace.—Messrs. Grönwall, Lindblad and Stålhane have devised a steel-refining furnace in addition to their ore-smelting furnace already described.

Their refining furnace, Figs. 100 and 101, resembles in general appearance the Héroult furnace, being arranged to tilt for pouring and being provided with two carbon electrodes entering through the roof of the furnace and supported on adjustable holders attached to the shell of the furnace.

The electrical arrangements are different, however. Two-phase current is used for this furnace and a permanent carbon electrode is built into the bottom of the furnace, where it is in electrical contact with the metallic shell. The magnesite lining of the furnace is put

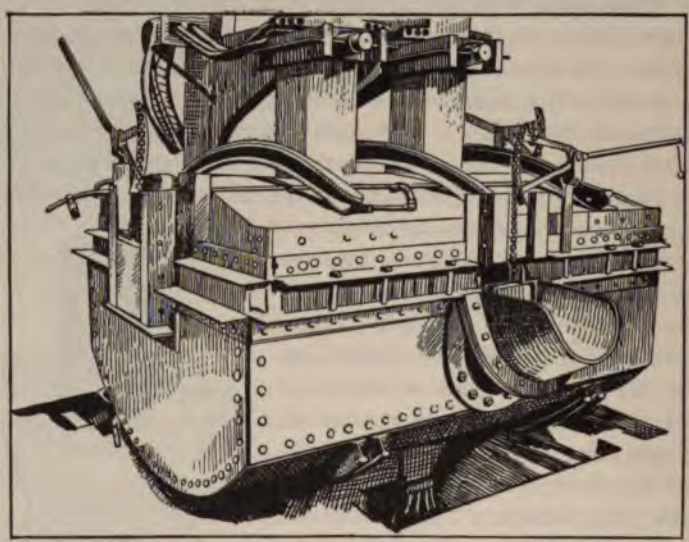

FIG. 100.—"Electro-metals" furnace.

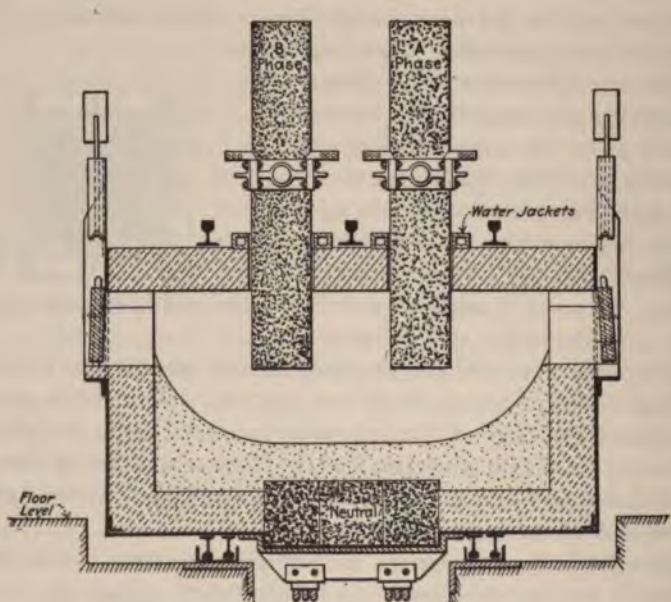

FIG. 101.—"Electro-metals" furnace.

in over this carbon block, covering it completely. The two upper electrodes are each connected to one phase of the supply, the other pole of each phase being connected to the neutral pole or bottom electrode of the furnace. In starting with a cold furnace the current will pass between the two upper electrodes through the metallic charge but when the furnace becomes thoroughly heated the magnesite begins to conduct and the current passes in its normal direction, that is between each of the upper electrodes and the bottom electrode. This arrangement is more favorable to steady operation than is the arrangement of the Héroult furnace in which the current enters through one movable electrode and leaves through the other. In the Héroult furnace if one arc is broken the whole supply of power is stopped, but in the Grönwall furnace one arc may be broken without interfering with the other and therefore the furnace will operate more steadily as regards electrical supply. The use of two-phase current produces a circulation of the steel in the furnace which facilitates the refining action of the slag lying on the metal. It is stated that the passage of the current through the magnesite bottom of the furnace does not impair it in any way. Heat will certainly be produced by the passage of the current through the magnesite, and will assist in the operation of the furnace. In the event of such a furnace being supplied with three-phase current this is transformed into low-voltage two-phase current by two transformers arranged with the Scott connections (Fig. 53) as explained in the case of the Trollhättan furnace. The rest of the construction of the furnace is substantially the same as in the other varieties of Héroult and similar furnaces and need not be specially described.

INDUCTION FURNACES

The Kjellin furnace is of the induction type, and resembles a step-down transformer. In Fig. 102[1] which represents a 225-h.p. furnace at Gysinge, Sweden, *A* is the primary winding to which an alternating current of 90 amperes at 3,000 volts is supplied. *B* is a circular trough containing the molten steel, and corresponding electrically to a secondary winding of one turn. *C* is the magnetic circuit which passes through both the primary and the secondary windings. The alternating current in the primary windings induces an alternating current in the ring of molten steel; this secondary

[1] Dr. Haanel, European Report, Figs. 1 and 2, and pp. 1–4.

current being estimated at 30,000 amperes and 7 volts. This furnace has the great advantage of requiring no electrodes, which is not only a gain as regards trouble and expense, but avoids any contamination of the steel by the material of the electrode. The heat is generated uniformly throughout the steel, which is contained in a closed receptacle, under conditions which resemble those of the

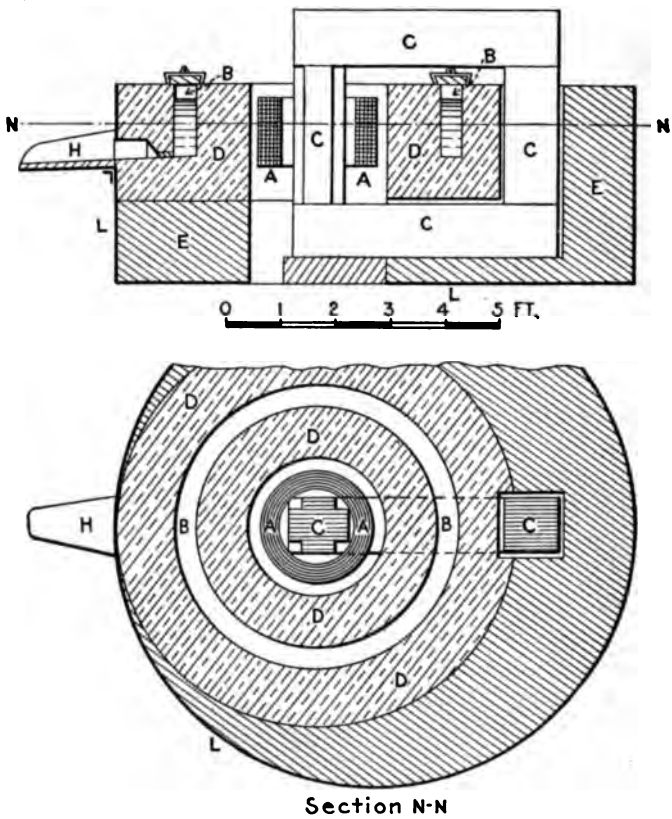

FIG. 102.—Kjellin furnace.

crucible furnace. The electrical furnace has, however, the advantage of holding as much steel as many crucibles, and of being quite free from the furnace gases which are liable to enter even a closed crucible.

Compared with the Héroult furnace, the Kjellin furnace has the objection that the annular groove containing the steel is very long in comparison with its cross-section, which will cause the loss

of heat to be excessive and the weight of steel to be small for a furnace of a given size. The furnace does not form a very efficient transformer, and it appears to be limited in size, the power-factor becoming smaller as the furnace becomes larger, unless the frequency of the current is correspondingly reduced.[1] On the other hand the current can be used at high voltages, such as 3,000 or even 5,000 or 6,000 volts, which would permit of the generation of the current and its transmission over moderate distances without the use of a step-down transformer at the furnace.

The Kjellin furnace was in operation at Gysinge, Sweden, when visited by the Commission in 1904, and was usually making a high class of tool steel from pure pig-iron, steel scrap and bar iron, for which purpose it seems particularly adapted. In operating the furnace the molten steel from one run is not tapped out completely, but about one-third of it is left in the groove to act as a conductor to carry the current at the beginning of the next run; the fresh charge of charcoal pig-iron and pure iron or steel scrap is added to the superheated steel as fast as it can take it without chilling. No refining is attempted in this furnace, the operation being merely one of melting a metallic charge, made up in correct proportions to give a steel of the right composition.

The furnace is built in a circular iron casing, *LL*, which is lined with fire-brick at *EE*. The trough *B* is surrounded with more refractory material, *DD*, for which either magnesite or dolomite bricks can be employed. The open space in the middle of the brickwork serves to cool the primary winding, by the current of air passing through it. Water-jackets are also employed to protect the winding from the heat of the furnace. The groove *B* is covered by a series of movable lids to retain the heat as far as possible, and any of these can be removed for charging the furnace. At the end of the operation the steel is tapped from the furnace by the spout *H*.

In one run[2] the furnace contained about 1,500 lb. of steel from the previous charge, and the fresh charge of best Swedish pig-iron, steel scrap and Walloon bar iron weighed about 2,300 lb. Small amounts of silicon-pig and ferro-manganese were added in the furnace, and 2,271 lb. of good quality tool steel was obtained. Samples of this steel were tested chemically and mechanically by Mr. Harbord with satisfactory results. The power employed was nearly 150 kw. and the run lasted 6 hours. The energy consumed

[1] In more recent furnaces this difficulty has been partly overcome.

[2] Dr. Haanel, European Report, Charge No. 546, pp. 59–61 and 47–48.

amounted to 0.13 h.p. years, or 850 kw.-hours per ton of steel ingots. The power-factor at full load was only 0.635 with a current frequency of 13 1/2 cycles per second.[1] It will be seen that the consumption of energy for a ton of tool steel is less than in the Héroult furnace; but it must be remembered that in the latter, miscellaneous scrap was employed and washed with basic slags until free from phosphorus and sulphur, after which it had to be recarburized to obtain tool steel, while in the Kjellin furnace only the purest materials were employed, and they merely needed to be melted together in order to produce steel. On account of its smaller capacity, the Kjellin furnace will, no doubt, use more electrical energy than the Héroult for the same amount of useful work, but this difference in efficiency does not appear to be very great and may be more than offset by the absence of electrodes with their regulating appliances, heavy cables, and low-voltage transformers. In other words, the Kjellin furnace may be expected to hold its own for certain classes of work, in competition with the Héroult furnace.

The Kjellin furnace has been used for high-carbon steel-making, but attempts were made, for the Commission, to make medium- and low-carbon steel in this furnace; and while the attempts were not very successful, mainly because there was not sufficient electrical power to melt the more refractory mild steel, it appeared probable that with a little more power any variety of steel could be produced in the Kjellin furnace.

During the year ending May 31, 1906, a furnace at Gysinge, giving 1 ton of steel per tap, produced 950 tons of steel and special steel ingots.[2]

More recent data with regard to the furnace at Gysinge are given by the American Electric-furnace Co.[3] They state that the furnace requires for its operation 165 to 170 kw., and has a capacity of 3,000 lb. of metal, of which about 1,850 lb. are tapped out at the end of each heat. The length of a heat is four hours, and the consumption of energy, when all the charge is added cold, is 800 kw.-hours per ton. Working with hot metal from the blast-furnace a larger output and greater economy is obtained. This is partly because the

[1] E. C. Ibbotson, Jour. Iron and Steel Inst., 1906, No. III, p. 397. Electrochemical Industry, vol. iv, p. 350.

[2] Further particulars of the furnaces at Gysinge are contained in a report by V. Engelhardt, Stahl u. Eisen, 1905, and Electrochemical Industry, vol. iii (1905), p. 294.

[3] American Electric Furnace Co., 45 Wall Street, New York. Bulletin No. 1, June, 1907.

furnace can be completely emptied after each heat, as it can easily be restarted by pouring in a charge of molten pig-iron. Thus a charge of 1,430 lb. of molten pig-iron was poured into the empty furnace, and 2,860 lb. of cold pig and scrap were added. In six and three-quarter hours with 182 kw. the charge was finished, the consumption of energy being 650 kw.-hours per ton of steel ingots. The waste of material during the melting operation is found to be 2 per cent., and the furnace lining will last for twelve weeks, costing about 60 cents per ton of steel. Purchasing electrical energy at 1/2 cent per kilowatt-hour, and using cold material in the furnace, the electrical energy will cost a little more than the fuel in the crucible process, but a great economy is effected by avoiding the use of crucibles. The cost for labor is also much less in the electrical method.

The Colby Steel Furnace.—More than ten years before the invention of the Kjellin furnace, Mr. Edward Allen Colby had patented an induction furnace for melting metals.[1] In one of his first patents,[2] the primary winding is shown surrounding the circular channel, instead of being within it as in the Kjellin furnace; the furnace tilts in order to pour the charge, and is covered with a hood for the purpose of excluding the air; the hood being arranged so that the molten metal could be poured into a mould without being exposed to the air.

In his later furnaces, however, the primary winding has been placed within the secondary as in the Kjellin furnace, and the covering hood has been discarded, but the arrangement for tilting the furnace in order to pour its contents is still employed.

About eight years ago Mr. Colby and Dr. Leonard Waldo[3] produced the first steel made in the induction furnace in the United States, and in 1907 a Colby furnace holding 190 lb. of crucible steel was in operation at the works of Henry Disston & Sons, near Philadelphia,[4] and several much larger furnaces were in process of construction.

The small furnace used at the Disston steel plant is shown in

[1] U. S. patents 428,378, 428,379, and 428,552, of May 20, 1890. See Electrochemical Industry, vol. iii, p. 134.

[2] U. S. patent 428,552, see Electrochemical Industry, vol. iii (1905); Fig. 3, p. 299.

[3] Electrochemical Industry, vol. iii (1905), p. 185.

[4] Trans. Amer. Electrochem. Soc., vol. xi (1907).
Electrochemical Industry, vol. v(1907), p. 232.

the frontispiece, and diagrammatically in Fig. 103.[1] It consists of a laminated iron core, around which is a primary winding of 28 turns of thick-walled copper tube, *P*, and an annular crucible, *C*, containing the steel, *S*, which forms the secondary circuit of the transformer. The whole furnace tilts to pour the molten steel, rotating about an axis indicated by the line *XY*. The primary winding can be cooled very efficiently by water circulating through the copper tube, of which it is composed, and can therefore be placed in close proximity to the secondary circuit without any danger of becoming over-heated. This arrangement of the coils gives far less opportunity for magnetic leakage than in the Kjellin furnace shown in Fig. 102, and it is not surprising to find that a much higher power-factor has been obtained;

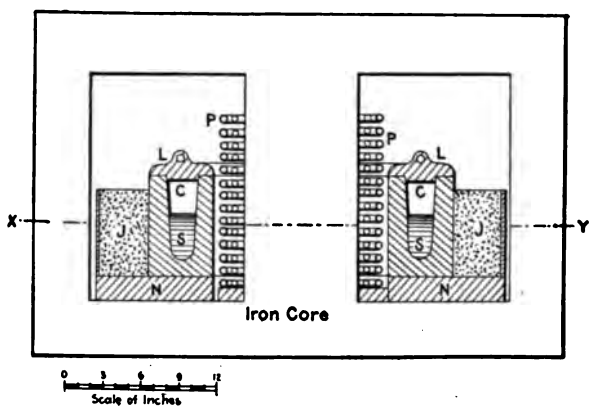

FIG. 103.—Colby furnace.

although this may be due in part to the small size of the Colby furnace. Mr. Colby gives the power-factor as 0.93, and states that the average power-factor after the charge of metal is fused is never below 0.90. The use of copper tube for the primary involves, however, the employment of relatively low-voltage current, and its proximity to the crucible must cause considerable losses of heat, although this will be guarded against as far as possible by a packing of asbestos or other heat-insulating substance between the crucible and the copper pipes. The crucible itself is made of graphite and clay, being similar in composition to the graphite crucibles usually employed for steel-making.[2] Such crucibles are moderately good conductors of

[1] From a sketch by Mr. Colby.

[2] For construction of the Colby crucible see U. S. patents 840,825 and 840,826, described in Electrochem. Industry, vol. v, p. 55.

electricity, and a portion of the secondary current will no doubt pass through the crucible itself, thus producing heat in the walls of the crucible as well as in the steel.. The crucible rests upon a slab of soapstone, *N*, and is jacketed by some heat-insulating material, *J*.

The following data in regard to this furnace are taken in part from the account issued to the American Electrochemical Society,[1] and in part from a private communication from Mr. Colby to the author:

Crucible capacity, 200 lb. of steel.
Working capacity, 100 lb. of cast-steel ingots per hour.
Kilowatt hours per 100 lb. of cast-steel ingots, 35.
Power-factor, 0.93.
Maximum kilowatts with 190 lb. steel seldom exceeds 43.
Rated size of furnace for crucible steel-making, 60 kw.
Primary current is single-phase, 240-volt, frequency 60, less than 200 amperes.
Secondary current about 9 volts and about 5,000 amperes.
Length of operation, 1 hour; half of which is required for fusion and the other half for refining and "killing."
Ingots of about 90 lb. are poured every hour, the remainder of the steel being left in the crucible for starting the next operation.
Primary winding, 28 turns of copper tube of 3/8-in. internal, and 5/8-in. external diameter.

The induction furnace is an extremely convenient and reasonably economical appliance for melting steel and other metals and alloys, and there can be no doubt that when mere melting is required, as in the production of crucible-steel from pure varieties of iron and steel, it is the best form of electric furnace; and that when electric power can can be obtained at reasonable rates, it is both better and cheaper in operation than the crucible process.

The larger sizes of induction furnace, such as would be used in the production of structural steel, appear to have a reasonably good efficiency. A furnace of 636 kw. is stated to have an output of 30 tons per day if charged with cold material, and 36 tons when charged with hot metal. These figures refer to the production of steel from "pig and scrap," that is by a simple melting operation, and correspond to expenditures of 590 and 490 kw.-hours respectively per ton of steel. It should be noted that these figures are apparently the results of calculations by Mr. Engelhardt,[2] and not of actual

[1] Trans. Amer. Electrochem. Soc., vol. xi (1907), and Electrochemical Industry, vol. v (1907), p. 232.

[2] Electrochemical Industry, vol. iii, p. 295.

operations. About the same amount of electrical energy would probably be needed for the simple melting of pig and scrap in the Héroult furnace, but as this furnace is generally employed for purifying as well as merely melting the steel, it is not easy to make an exact comparison.

The Grönwall Furnace.—An induction steel furnace invented by Messrs. Grönwall, Lindblad and Stålhane, is illustrated in Fig. 104.[1] This furnace embodies certain features which enable it to be built on a larger scale than was previously possible, without having an excessively low power-factor, and without requiring current at unusually low frequencies.

The first point to notice is the trough containing the steel. Instead of being circular as in the Kjellin and Colby furnaces, this trough has a semicircular portion, *F*, passing around the core, *E*, and a folded portion, *G*, extending to the right of the core. This form of channel has the advantage of being more compact than a circular channel of the same length, and of having a smaller inductance. The gridiron-like construction of the channel had been employed previously by G. Gin, Fig. 108, but its application to an induction furnace was new.

Another new feature in the furnace is the position of the primary coil, which is placed, not at *C*, as in the earlier forms, but at *A*, around the outer limb, *D*, of the transformer core. *B* and *C* are compensator coils for reducing the magnetic leakage of the core.

In the earlier forms of induction furnace a serious difficulty was the very low power-factor, which appeared to limit the utility of this type of furnace. Lindblad gives the following formula for the power-factor of an induction furnace;

$$\text{Tan}\, Y = \frac{cna}{ls}\left\{\frac{1}{W^s}+\frac{1}{W^p}\right\}$$

where,

Y = angle of phase displacement.
n = frequency.
a = area of cross-section of steel in the channel.
l = length of channel.
s = specific resistance of the steel.
c = a constant.
Ws = magnetic resistance around secondary circuit.
Wp = magnetic resistance around primary circuit.

[1] Dr. Haanel's 1907 Report, pp. 101–104, and plates x,–xii.

The power-factor, cos Y, is highest when tan Y is lowest, that is when the magnetic resistances are high, the frequency low, and the electrical resistance of the secondary is high. The very low power factors of the earlier furnaces were caused by the excessively low electrical resistance of the secondary circuit, and the necessarily large space within the circular steel channel, which afforded an easy leakage for the lines of magnetic force. It became necessary therefore to use currents of very low frequency such as 12 or 15 for small furnaces, while even three or five alternations were proposed for

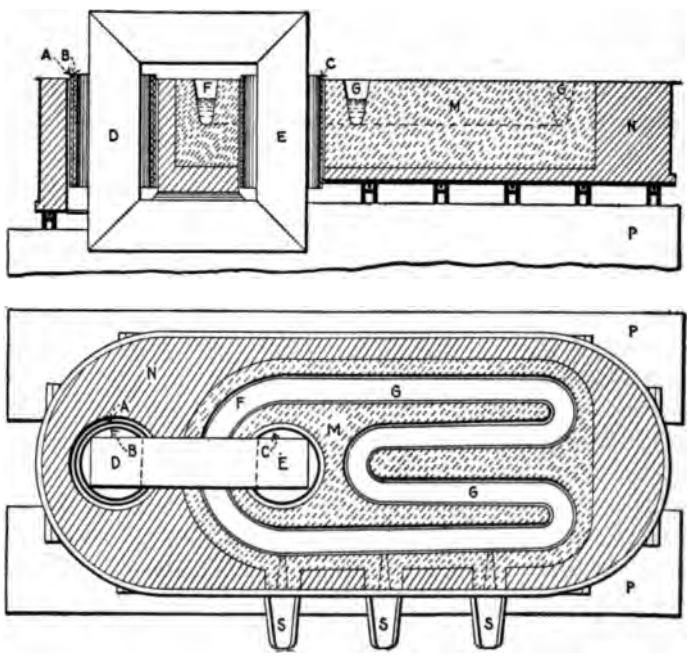

FIG. 104.—Grönwall furnace.

larger furnaces; thus requiring special electrical machinery, and making it impossible to draw the current from ordinary power-plants.

In this furnace the steel channel turns as closely as possible around the transformer core, and yet has a considerably greater length, thus obtaining an increased electrical resistance of the secondary circuit and a greater resistance to the magnetic leakage through that circuit. The primary coil, A, is placed on the outer limb of the core, in order to have it further from the hot metal

and so to protect the insulation of the coil from the heat of the furnace. This arrangement allows of the use of higher voltage current in the primary than would be possible in the old position.

The compensator coils, *B* and *C*, are two equal coils connected together in such a way, that if the magnetic flux in *D* and *E* were equal, no current would flow in *B* or *C*. If, however, leakage occurs, and there is a greater flux in *D* than in *E*, a current will flow in the coils in such a way as to oppose and partly prevent the leakage. An external source of electromotive-force may also be used to maintain a current in the coil, *C*, which then becomes an auxiliary of the main primary coil, *A*.

The electrical deficiencies of the transformer or induction furnace may be made clearer as follows: In an ordinary transformer the electric current flowing in the primary coil sets up a magnetic force in the core, and this force passes through both the primary and the secondary circuits. The alternating current in the primary is constantly changing in amount, and corresponding changes take place in the magnetic force in the core. The changes in the magnetic force produce an electric current around the secondary circuit. In the ordinary transformer the primary and secondary windings are close together and the magnetic force set up by the primary must pass through the secondary also, but in the induction furnace the secondary winding is a ring of molten steel and cannot be placed close to the primary winding without destroying it. The magnetic force produced by the primary has therefore a chance of escaping its work by doubling back between the primary and the secondary coils. The arrangement shown in the figure, of one coil on each limb of the core, makes it more difficult for the magnetic force to escape without doing its work and driving an electric current around the ring of molten steel. Another deficiency of the induction furnace arises from the low electrical resistance of the secondary circuit. In an ordinary transformer the secondary winding is connected to some external resistance or other load, but in the furnace the secondary winding is short-circuited, and having a very low resistance, its self-inductance will be high as compared with its ohmic resistance; and the current produced in the steel will consequently be far less than it would be if the secondary circuit were non-inductive, or the heat produced will be less than it would be if the ohmic resistance of the secondary formed a larger proportion of the whole resistance of that circuit. The gridiron portion of the steel channel has a smaller inductance in proportion to its length than the circular

part of the channel and consequently increases the non-inductive part of the resistance and hence the effectiveness of the transformer.

An alternative device for preventing magnetic leakage consists of a copper shield or mantle around the core, as shown at *M* in Fig. 105, where *A* is the primary coil and *DEH* the iron core. The lines of magnetic force cannot pass easily through this shield, as in so doing they would produce eddy currents in the metal of the shield, and these eddy currents would oppose the magnetic forces which started them. The shield must not, however, form a complete ring around the core, as it would then act as a choking coil on the primary current. It must therefore be made in the form of an incomplete cylinder, as at (1), or a spiral, as at (2).

The furnace in Fig. 104 is constructed of brickwork, *N*, in a metal container, and the groove containing the molten steel is constructed in

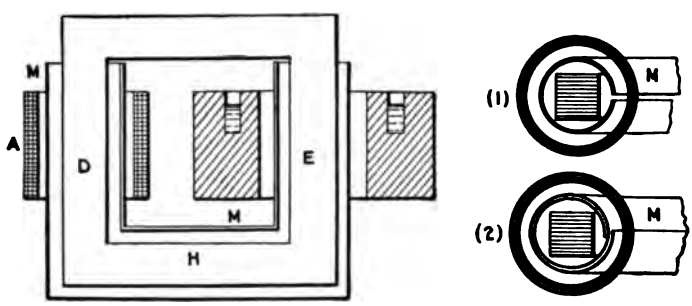

FIG. 105.—Induction furnace with shielded core.

some more refractory material, *M*, such as magnesite. The furnace is supported on two piers, *PP*, between which space is left for the transformer core *D E*. Three spouts, *S S S*, are provided at different levels; the upper spout serving to remove the slag, the middle spout to tap off the usual amount of steel, leaving a quantity in the furnace for keeping the secondary circuit unbroken, and the lower spout for emptying the furnace when necessary. In operating the Grönwall furnace partial short-circuits were produced by the leakage of steel into the lining materal dividing adjacent parts of the folded channel. A simpler design of secondary channel has therefore been adopted.

Röchling-Rodenhauser Induction Furnace.—The use of the induction furnace, as exemplified in the Kjellin and Colby furnaces, is limited by the very low power-factor which is obtained when these furnaces are built of any considerable size, and by the necessity of using currents of very low frequency. The use of these furnaces is

also limited because the molten steel contained in a narrow channel cannot be subjected to refining processes involving the addition of basic slags. The Rodenhauser furnace overcomes these difficulties in

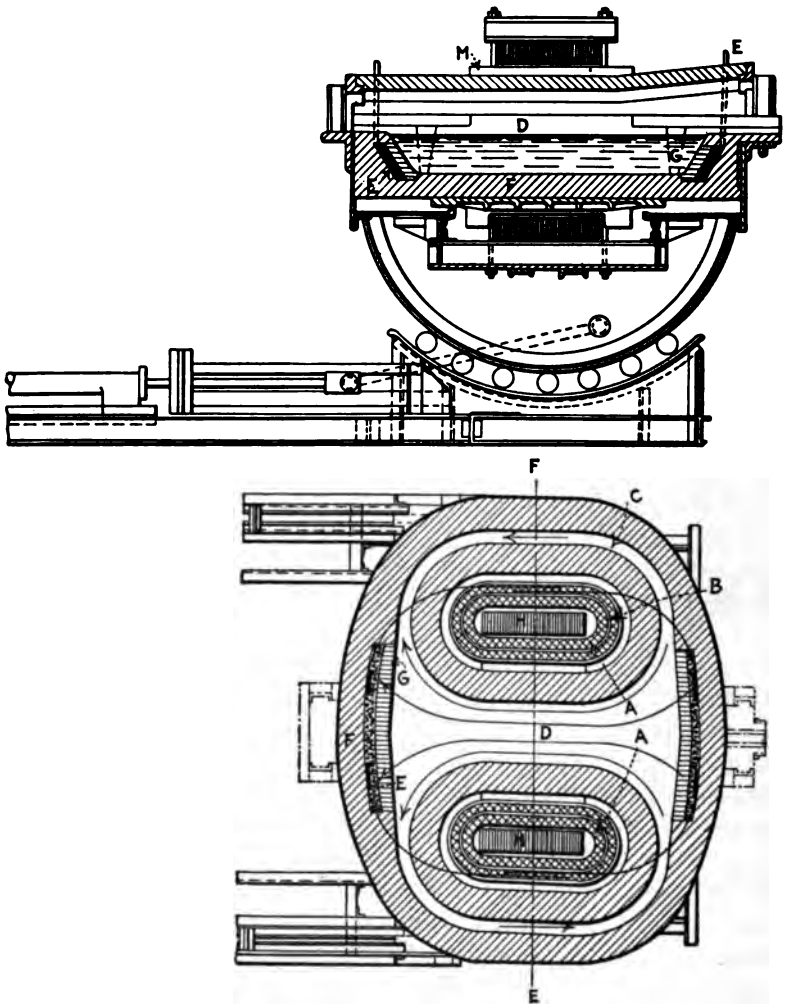

FIG. 106.—Röchling-Rodenhauser furnace.

a large measure. The single-phase furnace shown in Figs. 106 and 107 has an iron core with both vertical limbs, *H H*, passing through the furnace; each of these limbs is surrounded by a part of the primary winding, *A*, and around this is the channel, *C*, containing the molten

steel. These channels meet in the middle of the furnace, at *D*, and are expanded at this point to form a chamber of considerable dimensions where a large quantity of steel can be held in a molten condition. The electric current circulating around each limb of the core will produce most of the heat in the narrow channel, *C*, and it is therefore necessary to provide additional means for heating the steel in the enlarged central chamber, *D*. This is done by means of "pole-pieces," *E*, which are of iron, imbedded in the walls of the furnace, and separated from the molten steel by a portion, *G*, of the lining. The lining at this point is composed largely of magnesite, and is

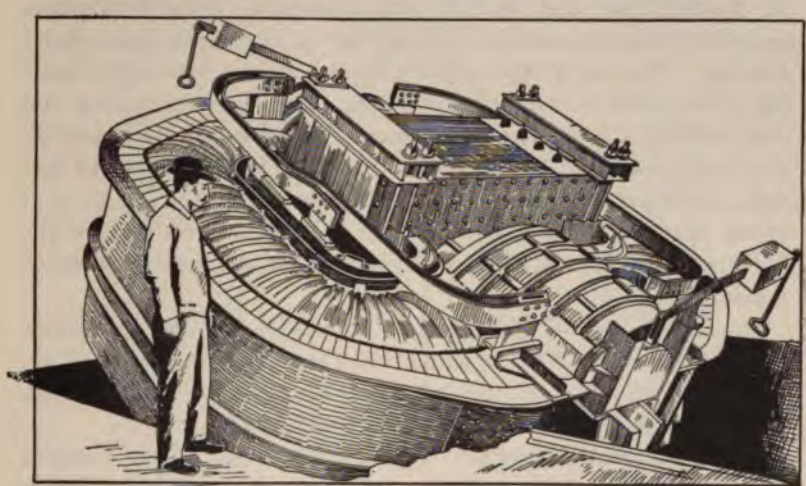

FIG. 107.—Röchling-Rodenhauser furnace.

sufficiently conducting to carry the electric current from the pole-piece to the molten steel.

In starting the furnace heat is produced in the annular channels as in other induction furnaces, but when the furnace has become heated the current also passes through the molten steel from the "pole-pieces" and thus sufficient heat is supplied to the central chamber to keep the steel molten. The "pole-pieces" are connected with a few turns, *B*, of a very heavy conductor passing around the limbs of the core. It seems probable, in view of the very low electrical resistance of the body of steel in the central chamber, that a material portion of the heat is developed by the passage of the current through the magnesite covering of the "pole pieces," but in any case the heat is communicated to the steel and serves to keep it molten.

It is found that this furnace has a far better power-factor than a similar furnace of the Kjellin type. Rodenhauser furnaces have been made to hold 8 tons of steel.

A furnace for three-phase current has also been constructed. In this furnace the iron core has three vertical limbs, which are connected together above and below the furnace. Each limb has a primary winding supplied with single-phase current and the channels containing the steel, which lie around each of these cores, coalesce in the middle of the furnace to form a central chamber. Iron "pole-pieces" are provided in this furnace, as in the single-phase furnace, for heating the steel in this central portion. Both single-phase and three-phase furnaces are arranged to tilt for pouring the steel and the slag. The use of three-phase current has the advantage of causing a circulation of the steel around the channels in the furnace and thus insuring a homogeneous product. This circulation is caused by the rotary magnetic field of such a furnace. The Rodenhauser furnace, by overcoming the difficulty of low power-factor and by providing space for refining the metal in the furnace, has enabled the induction furnace to be used for all purposes for which the arc-furnace is suitable.

Dr. K. G. Frank of the Siemens & Halske Co., informs the author that their furnaces are now operated by two-phase instead of three-phase current. The two-phase furnace has a "figure-eight" hearth, like the single-phase furnace, but has two magnetic circuits.

Frick Induction Furnace.[1]—This resembles the Kjellin furnace, but the primary windings consist of flat coils lying above and below the furnace. Furnaces are now designed,[2] of the double-ring type but without the pole pieces. Instead of these Mr. Frick uses his flat coils both above and below the furnace, and also a Kjellin coil wound on the core; the furnace being operated with two-phase current.

RESISTANCE FURNACES

The Gin Steel Furnace.[3]—Mr. G. Gin invented in 1897,[4] a furnace in which the heat is generated by the passage of a large electric

[1] Eugene Haanel, Ph. D., Director of Mines, "Recent Advances in the Construction of Electric Furnaces," Ottawa, 1910, p. 57.

[2] Dr. K. G. Frank of the Siemens Halske Co., Nov., 1912.

[3] A full account by the inventor is given in an appendix to Dr. Haanel's European Report, pp. 165–177. Also see translation by P. McN. Bennie, Electrochemical Industry, vol. ii, p. 20.

[4] French patent, No. 263,783, Feb. 6, 1897; see European Report, p. 166.

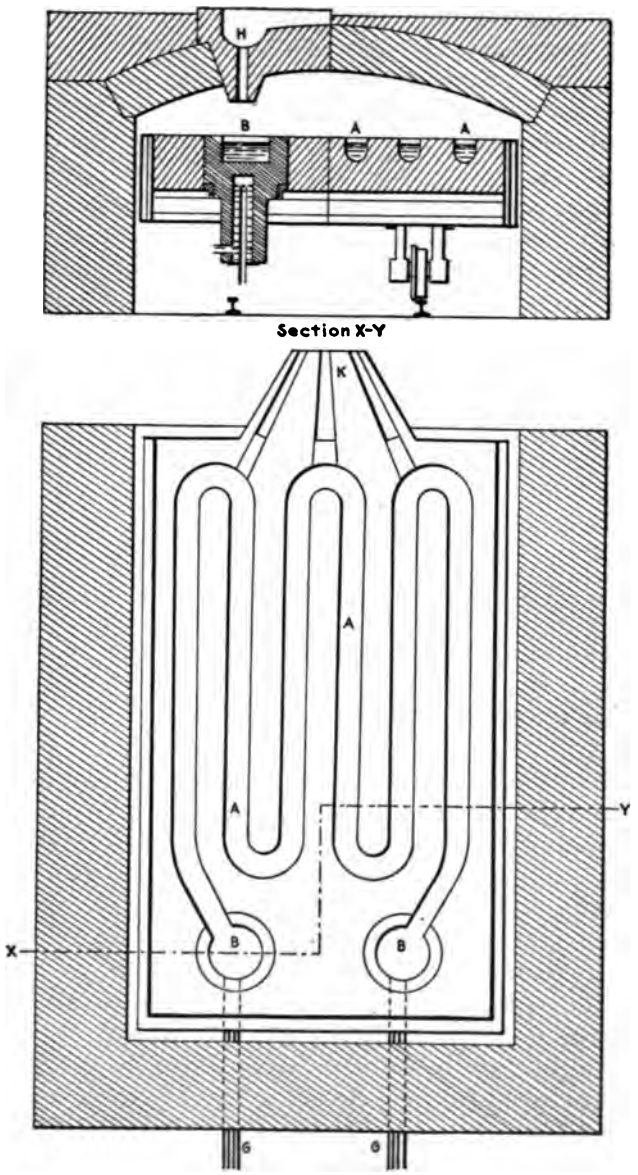

FIG. 108.—Gin's steel furnace.

current through a groove containing molten steel. In the Gin furnace the induction method is not used, but the current is led into the ends of the canal by water-cooled steel electrodes, which enter from below and form part of the furnace lining. In Fig. 108,[1] *A* is the groove or canal containing the molten steel, a portion of which, as in the Kjellin furnace, may be left in the furnace after each operation to start the current for the next run, and *BB* are the water-cooled steel terminals. On account of the low resistivity of molten steel, the trough or canal containing it should be of great length and small cross-section, in order to avoid the use of excessively large currents. This was advisable in the Kjellin furnace, but it is even more necessary in the Gin furnace, because the current must be developed in a transformer and led to the furnace by cables, all of which are more expensive, for equal power, as the current is larger in amount, and the transformer and cable losses are also very large when enormous currents are employed at low voltages. In the Gin furnace the trough *A* is therefore made long and narrow, and in order to secure compactness, with attendant economy of heat, it is folded backward and forward, like the filament in an incandescent lamp; the ends, *BB*, being brought to the same end of the furnace.

For convenience in repairing the hearth, it is mounted on a carriage which stands in a furnace consisting of three walls and an arched roof; the fourth side being closed during the working of the furnace by a movable door. *H* is one of the two spouts through the roof for introducing molten pig-iron. The pig-iron can be converted into steel by dilution with steel scrap, as in the Kjellin furnace, or by additions of iron-ore, as in the Héroult furnace. When molten pig-iron is employed there is no need to leave any steel in the furnace from the previous run. The steel is tapped from the furnace by means of the spout, *K;* three channels, one from each loop of the canal, leading the steel to the spout. The cables for leading in the current are connected electrically by the bars *GG*, to the lower part of the water-cooled terminals *BB*. A 700-kw. furnace would have a canal nearly 30 ft. long, 9.75 in. wide and 19.5 in. deep;[2] and it would contain 8,550 lb. of steel, which would about half fill the groove, and would require a current of about 50,000 amperes at 15 volts.

The construction and maintenance of the furnace hearth will probably be a matter of considerable difficulty; the adjacent branches

[1] Modified from figures in above Report.

[2] European Report, p. 173.

of the canal being near together, any leak of metal from one to the next would lead to a short-circuiting of the current and a rapid enlargement of the leak, while the addition of iron-ore in the channels will lead to a corrosion of the walls. The best material for the construction of the hearth would probably be chromite, as this is very refractory and only slightly affected by either silicious or irony slags.

The simple resistance furnace described above was not found to be satisfactory, and Mr. Gin has modified its construction considerably, supplying the current by carbon electrodes, or by induction, in more recent furnaces.[1]

Dr. Hering's Furnace.—This furnace, described in Chapter II and illustrated in Fig. 21, is a resistance furnace which can be used for steel making, and should, therefore, be referred to at this point although no details of its construction or use on a large scale are as yet available.

[1] G. Gin, "The Self-circulating Gin Furnace for the Electric Manufacture of Steel," Trans. Am. Electrochem. Soc., xv, 1909, p. 205.

CHAPTER IX

THE PRODUCTION OF STEEL FROM IRON-ORE

ELECTRIC STEEL SMELTING

Malleable-iron or steel can be produced by heating iron-ore with a limited amount of carbon; enough carbon being provided to reduce the oxide of iron to the metallic state, but not enough to unite with the reduced metal to make pig-iron. The primitive metallurgists obtained wrought-iron and steel in this manner, by reducing the ore in small furnaces, instead of first making pig-iron and then turning the pig-iron into wrought-iron or steel as is the present practice. Iron nearly free from carbon is, however, very difficult to melt, and in the little forge or furnace of the savage the iron was not melted, but obtained in the form of a solid lump, which was then cut up and hammered into shape; it being often necessary to pull the furnace down in order to extract the bloom of reduced iron or steel.

In modern times attempts have been made to improve on these primitive methods of making steel from iron-ore, and the following examples may be mentioned: The Chenot process,[1] in which iron-ore mixed with charcoal was heated in a retort; the Siemens process,[2] in which iron-ore mixed with bituminous coal was heated in a revolving furnace; and the Husgafvel process,[3] in which the iron-ore was smelted with charcoal in a low blast-furnace. In each case, the product was a lump of malleable-iron, more or less carburized, which was hammered into the required shape, or could be melted in crucibles, or in the open-hearth furnace. With larger blast-furnaces it is possible to melt even pure iron, but the melted iron rapidly absorbs carbon from the fuel employed, and so becomes pig-iron. It follows from this and other reasons, that wrought-iron and steel cannot be made in a blast-furnace. In the electric smelting furnace, however, the conditions are different, because, as the heat is supplied electrically and is not dependent upon the burning of fuel, the amount of carbon supplied can be adjusted exactly to suit the

[1] Chenot process, F. W. Harbord, "The Metallurgy of Steel," 1904, p. 246.

[2] Siemens process, F. W. Harbord, "The Metallurgy of Steel," 1904, p. 247.

[3] Husgafvel process, F. W. Harbord, "The Metallurgy of Steel," 1904, p. 246.

chemical needs of the ore, so as to make a carbon-free iron, or any desired grade of steel.

Captain Stassano has effected this in his electric arc-furnace[1] (Fig. 109), which resembles an open-hearth steel furnace, in which the flame of burning gas has been replaced by the flame of the electric arc. The furnace consists of an iron casing lined with fire-brick, *E*, and with an inner lining of magnesite bricks, *D*. An arc is maintained between the ends *G* and *H* of two nearly horizontal carbon electrodes, the holders of which work through air-tight stuffing boxes in water-cooled casings, *J* and *K*. This arrangement prevents the escape of the furnace gases, cools the electrode holders and prevents the oxidation of the external portions of the electrodes.

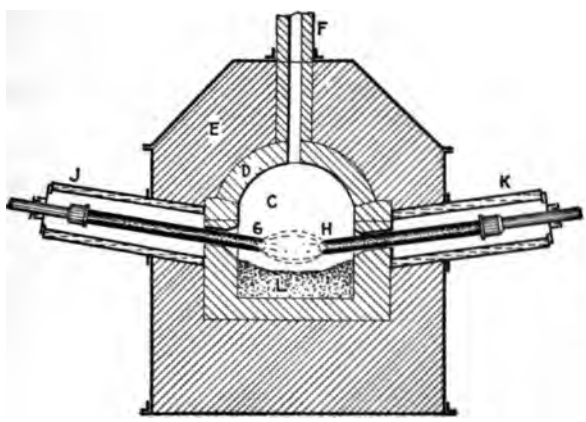

FIG. 109.—Stassano furnace.

The necessary amount of carbon for making iron or steel is incorporated with the ore in the form of briquettes, which are introduced into the furnace, and heated until the chemical reactions have taken place and the reduced metal has melted. The metal and slag are then tapped out and the operation is repeated. The carbon monoxide, resulting from the reaction of the carbon and the ore, escapes from the furnace by the hole *F*. This waste gas might be employed for drying and preheating the ore.

Dr. Haanel was unable to see Stassano's furnace at Turin in operation, as it was out of repair at the time of his visit, but he gives a description of the furnace and prints an account of the process

[1] Electrochem. Industry, vol. i, pp. 247, 363, and 461; vol. iii, p. 391. Engineering and Mining Journal, June 15, 1907, p. 1135.

written by the inventor.[1] The newer forms of furnace are inclined about 7° from the vertical and rotate slowly round this inclined axis, with a view to stirring up the charge and allowing the heat of the arc to act more freely on the ore. In some furnaces three electrodes are used, with three-phase current, while in other furnaces four electrodes are employed. Stassano gives the following particulars with regard to a furnace of 1,000 h.p.[2] The cost of the furnace is $5,000, the output per day is 4 or 5 tons, a current of 4,900 amperes at 150 volts is distributed to four electrodes (2,450 amperes to each electrode). The electrodes are 6 in. in diameter and 4 ft. to 5 ft. long. A 5-ft. electrode weighs 130 lb., and costs 3 cents a pound. The consumption of electrodes is 22 to 33 lb. per ton of product, that is 70 cents to $1 per ton of steel. The lining is of magnesite bricks, and two days are required for repairing the furnace. The lining will last at least 40 days. One man is needed per furnace to regulate the arc; one man for charging two furnaces, and five men for tapping six furnaces. Taking the above figures of 1,000 E.H.P. days for 4 or 5 tons of iron or steel, each ton would need 0.55 to 0.69 h.p.-years for its production. Dr. Goldschmidt[3] investigated the process in 1903 on behalf of the German patent office, and found that it was technically successful, making workably ductile iron with less than 0.2 per cent. of carbon directly from pure Italian ores. The energy used was 0.46 to 0.49 h.p.-years per metric ton of iron. The process was reported as too expensive to compete with existing methods in Germany.

A later series of experiments was made by Stassano in a three-phase furnace of 150 kw.[4]

Particulars of some of these experiments are given in the following table.

TABLE XVII.—STASSANO'S EXPERIMENTS IN 1908

Ore

Fe_2O_3	68.70 per cent.	CaO	1.00 per cent.
Mn_3O_4	3.23 per cent.	MgO	5.67 per cent.
SiO_2	17.15 per cent.	P	0.15 per cent.
Al_2O_3	2.00 per cent.	S	0.12 per cent.

Charge

Ore	100 kg.	25 per cent. solution of sodium silicate	8 kg.
Limestone	35 kg.	Calcium carbide	5 kg.
Charcoal	24 kg.		

[1] Dr. Haanel, European Report, 1904, pp. 178–214.

[2] Dr. Haanel, European Report, 1904, p. 12.

[3] Electrochemical Industry, i, 1903, p. 247.

[4] Electrochem. and Metal. Ind., vol. vi, 1908, p. 315; vol. ix, 1911, p. 642.

Products

Number of test	I	II	III	IV
	Per cent.	Per cent.	Per cent.	Per cent.
Carbon	0.25	0.26	0.30	0.80
Manganese	0.12	0.21	0.24	0.30
Silicon	0.07	0.03	0.14	0.22
Phosphorus	0.010	0.010	0.015	0.015
Sulphur	0.065	0.040	0.07	0.045
Kw.-hours per ton	0.51	0.49	0.46	0.48

In these experiments the ore, limestone and charcoal were crushed, mixed and briquetted with a 25 per cent. solution of water-glass.

Comparing the direct process of Stassano with the more usual plan of smelting first to pig-iron, and then refining the iron and making steel; it will be seen that the electrical energy needed to smelt ore directly to steel in the Stassano furnace is greater than the energy needed for the other two processes, and that his process was used with nearly pure ores, while the indirect method allows the use of any kind of iron-ore. The Stassano furnace is intermittent in action, as each charge of ore must be reduced, melted, refined and tapped before a fresh one can be introduced. The economy of heat is poor because the heat of the escaping gas is not utilized, and its chemical energy is not employed, as it might be, for the reduction or preheating of the ore.

With regard to the possibility of producing pure steel in a single operation from impure ores, the conditions under which the hurtful elements, sulphur and phosphorus, are removed from iron and steel may be considered. In the blast-furnace, sulphur is removed from the iron and passes into the slag as calcium sulphide, its removal in this way being more complete as the furnace is more strongly reducing and the slag is richer in lime; that is, when the conditions are favorable for the formation of calcium to combine with the sulphur. The electric furnace making pig-iron has more strongly reducing conditions, and can carry more lime in the slag than is possible in the blast-furnace; this explains its superior ability to eliminate sulphur. When, however, the ore is smelted directly to steel in the electric furnace, the conditions are far less reducing, and there is less reason for expecting the removal of sulphur as calcium sulphide, even in the presence of a limey slag. The sulphur remaining in the steel after the smelting operation can, however, be removed very

perfectly in the electric arc-furnace by means of a limey slag to which carbon has been added.

With regard to the elimination of phosphorus the conditions are quite the reverse, as this element can only be removed by oxidation. In the blast-furnace any phosphorus in the charge finds its way into the pig-iron, and the same takes place in the electric furnace making pig-iron; but in the open-hearth furnace, with a strongly basic slag, the removal of phosphorus can be satisfactorily accomplished, and the same will hold good in the production of steel directly from the ore in the electric furnace, if the slag is limey and sufficiently oxidizing.

In an electric steel-making furnace such as the Héroult or the Stassano, in which the molten steel can be washed by the repeated addition and removal of limey slags, any sulphur and phosphorus can ultimately be removed; but the production of steel directly from the ore can be accomplished most economically in some form of shaft furnace, that is a furnace resembling the Héroult ore-smelting furnace, which is operated continuously, instead of intermittently like the steel furnaces. It was therefore a question of the greatest importance in regard to the possible production of steel directly from the ore, to determine whether in a continuous smelting furnace, steel free from sulphur and phosphorus could be produced from ores carrying the usual proportions of these elements. The author accordingly proposed the problem to two of his students, Messrs. W. G. Brown and F. E. Lathe, and embodied the results of their work in a paper read before the Canadian Mining Institute in March, 1907. The experiments were made in a small shaft furnace resembling the furnace used at Sault Ste. Marie, but lined with burnt magnesite. As no carbon could be used as a lining for the crucible of the furnace, electrical connection was made by means of an iron rod passing through the bottom of the furnace. The power available was rather small, but it was found possible to run the furnace regularly for a few hours at a time, producing low-carbon steel of which some 2 or 3 lb. were tapped at intervals of about half an hour.

The ore used was a pure hematite from Lake Superior, containing 97 per cent. of ferric oxide, 2.23 per cent. of silica, and 0.68 per cent. of alumina. Clay, sand, and lime were added to make a slag equal to about half the weight of the resulting metal, and 1 per cent. each of sulphur and phosphorus was added in the form of monosulphide of iron and calcium phosphate.

Analyses of the steel and slag from a number of the taps are given

in Table XVIII, and show very clearly the effect of lowering the carbon in the charge, and so producing steel instead of pig-iron. If sufficient carbon had been added in the charge, a pig-iron would have been produced rich in carbon and silicon, low in sulphur, and with more than 1 per cent. of phosphorus. With the smaller amount of carbon which was charged in these experiments, the resulting iron contained less carbon and silicon and more sulphur (see No. 1 in the table). As the carbon in the charge was diminished, the resulting metal contained still less carbon and silicon, and at the same time the phosphorus in the steel was progressively reduced, until in the lowest carbon steels the phosphorus became low enough for structural purposes. The sulphur, on the other hand, which would have been nearly eliminated in the production of pig-iron, increased with the decrease of carbon, no doubt because there was less opportunity for its removal as calcium sulphide; but further decrease of carbon, resulting in a highly oxidized slag, served to remove a portion of the sulphur, probably a calcium sulphate, in the same way that it is removed in the basic open-hearth furnace.

TABLE XVIII.—STEEL AND SLAG ANALYSES

Test No.	1	2	3	4	5	6	7
Steel							
C., per cent	2.09	1.16	0.54	0.088	0.088	0.088	0.091
Si., per cent	0.20	0.15	0.24	.....	.....	.....	.....
S., per cent	0.75	0.91	1.04	0.54	0.65	0.68	0.47
P., per cent	0.49	0.24	0.20	0.039	0.046	0.081	0.031
Slag							
FeO., per cent	4.5	7.1	3.6	20.54	20.64	26.94	33.46
SiO_2, per cent	31.7	30.3	32.2	16.77	18.92	15.66	15.42
CaO, per cent	30.7	30.8	36.0	27.07	35.17	35.17	32.54
MgO, per cent	15.8	21.3	17.6	22.34	13.90	13.84	11.34
Al_2O_3, per cent	13.2	9.3	11.7	7.48	5.30	3.53	2.13

The first three analyses are taken from one run of the furnace, while the last four are from another run, in which less carbon was charged. The second run appears to show that the carbon in the steel could be lowered to about 0.09 per cent., but that any further reduction in the amount of carbon charged, merely increased the already large percentage of iron oxide in the slag, without lowering any further the carbon in the steel.

While these analyses only represent the result of smelting an iron-ore in an electric furnace with particular conditions of charge, shape of furnace, current density, etc., and changes in any of these conditions

might influence the composition of the resulting steel, they indicate that in the electrothermic production of steel directly from a sulphurous ore, it will not be easy to remove the sulphur in an electric furnace operating continuously like a blast-furnace; although this is possible with intermittent operation, as in an electric open-hearth furnace. Phosphorus, on the other hand, can be satisfactorily removed when low-carbon steel is produced.

In smelting iron-ores to obtain a low-carbon product, the carbon electrodes, if in contact with the slag or melting ore, will be liable to more rapid corrosion than when smelting for pig-iron; on account of the scarcity of carbon in the charge. This difficulty, if it were found to be serious, might be overcome by the use of a furnace like that of de Laval, Fig. 20, in which the reduced and melted metal, collecting in two troughs, serves as the electrodes; electrical contact being made with the molten metal by solid rods of the same material. Another plan for avoiding the use of carbon electrodes is to employ the induction principle, as in the Snyder induction furnace, Fig. 131, or in some Swedish ore-smelting furnaces[1] which have a shaft for the reduiction of the ore, while the molten pig-iron, resulting from the operation, collects in an annular channel where it is heated by an induced electric current. The cost of producing low-carbon steel direct from pure Italian ore, in the Stassano furnace, has been estimated by Dr. Goldschmidt, who sets the cost of a ton of such steel at $18.80. The furnace does not utilize the heat of the current very perfectly, and with improved furnaces and better conditions for the purchase of general supplies, a lower figure might be expected.

In the year 1905 Mr. J. W. Evans of Belleville, Canada, took up the direct production of steel in the electric furnace from titaniferous and sulphurous ores; and in March, 1906, he showed, at the meeting of the Canadian Mining Institute,[2] a number of small tools made from this steel. The following table shows the extent to which the sulphur and titanium were eliminated in these experiments.

The ore was smelted in a small arc-furnace, which was operated intermittently, so that the steel and slag were superheated after the ore charge was completely smelted. In smelting the titaniferous ore, the addition of lime in the charge will remove the titanium. If little lime is used, in order to retain some titanium in the steel, the silicon will also be high. Mr. Evans continued his work on titaniferous ores

[1] Dr. Haanel, 1907, Report, p. 104.

[2] J. W. Evans, Jour. Can. Min. Inst., vol. ix, 1906, p. 128. Mr. Evans has patented a titanium steel and the method of making it from titaniferous ores.

TABLE XIX.—STEEL FROM TITANIFEROUS AND SULPHUROUS ORES

Coe Hill Ore (Sulphurous)				Bowen Mine Ore (Titaniferous)			
Ore				Ore			
Iron	68.01%			Iron	45.17%		
Sulphur	1.01%			Titanium	7.44%		
Test No.	I	II	III	Test No.	I	II	III
Steel				Steel			
Carbon	0.05%	0.07%	0.06%	Carbon	0.51%	0.84%	0.87%
Silicon	0.01%	Trace	0.04%	Silicon	0.62%	2.31%	0.05%
Sulphur	0.12%	0.17%	0.08%	Titanium	0.37%	1.02%	None

during the years 1908 and 1909, producing steel in quantities of a few pounds at a time, from which he made tools of very good quality.

Mr. Evans' experimental furnace consisted of a small chamber, open at the top, and provided with a pair of lateral electrodes which at the commencement of the process were nearly horizontal; an arc being formed between them as in the Stassano furnace. When the ore charge was nearly all smelted, the electrodes were depressed, so that their ends entered or nearly touched the slag; the electric current then passing directly through the slag, as in the Héroult steel furnace. On a larger scale the same effect would be obtained by the use of two pairs of electrodes, as in the laboratory furnace, Fig. 72; only one pair being used at once.

During the summer of 1909 the author visited Mr. Evans' plant, and suggested a number of modifications in the furnace and process with a view to greater economy in operation. An intermittent furance, like an open-hearth, was apparently necessary for finishing the steel, but a shaft furnace would be more efficient in smelting the ore. The author suggested that these two elements should be combined as in the furnace shown in Fig. 110.

In this furnace[1] the ore charge is heated and partly reduced to metal in the vertical retorts, *R*. It is then fed mechanically into the electric smelting furnace where it melts. When sufficient charge has been introduced, the feeding mechanism is stopped, and after the remainder of the charge has melted, part of the slag is tapped out and the steel and the remaining slag are superheated before tapping. Any additions that are needed can be made at this time. The carbon monoxide, formed in the electric furnace, passes up the shaft

[1] A. Stansfield, "Tool Steel Direct from the Ore in an Electric Furnace," Jour. Can. Min. Inst., xiii, 1910, p. 151.

through the ore, thus helping in its reduction to metal, and finally escapes into the chamber around the retorts where it burns; air for its combustion being admitted through holes, *H*, in the walls.

The experiments were continued by Mr. Evans at Belleville, and by the author and Mr. C. G. Porter in the Metallurgical laboratories

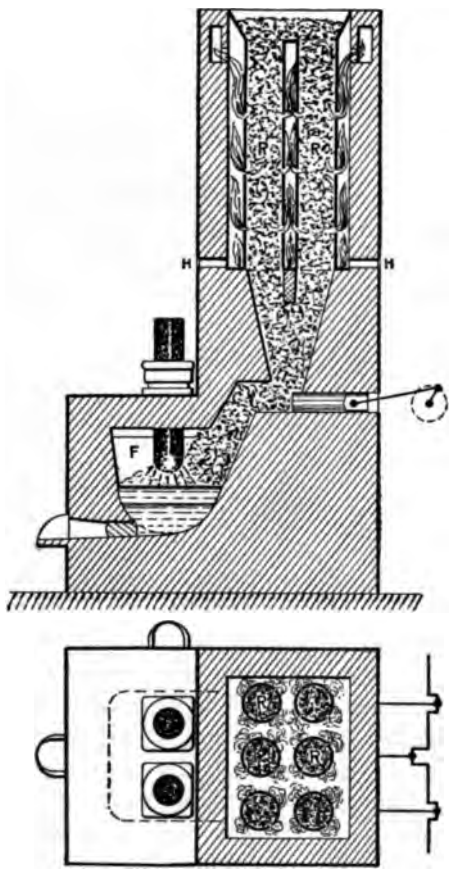

FIG. 110.—Evans-Stansfield furnace.

of McGill University, using the furnace of Fig. 72, as the combination open-hearth and shaft furnace was not convenient to operate on a small scale.

The process at first consisted in crushing the ore, mixing it with lime and charcoal, and briquetting the mixture with tar and pitch. The briquets were heated in closed chambers to drive off the volatile

matter, and to reduce the iron to metal, after which the red-hot briquets were fed into an electric furnace and melted down, yielding steel and slag. The closed chambers for heating the briquets would in practice consist of towers or vertical retorts heated externally by burning the gases derived from the charge. In view of the expense of briquetting, it is intended to dispense with this part of the process, and to smelt the ore, crushed roughly, and mixed with the lime and charcoal. The results obtained so far have been with the original briquetting process and are sufficiently good to warrant a test on a small working scale such as is now being made. The expense of briquetting, while undesirable, would not be prohibitive in the production of tool steel, if it were found necessary for the process.

The ore mostly used in the experiments was obtained from the Orton Mine, Hastings County, Ontario, Canada. A shipment of this gave the following analysis:

Magnetic oxide.....	75.40% (iron 54%)	Sulphur.....	Trace
Titanium oxide.....	12.65%	Phosphorus.....	0.015%
Silica.....	1.5%	Nickel.....	0.12%
Lime.....	5.75%	Vanadium.....	Trace
Alumina.....	3.95%		

A suitable charge consisted of 100 parts of ore, 12 parts of charcoal, 8 parts of lime, 7 parts of pitch, and 7 parts of tar. The mixture was warmed and briquetted, and the briquets were heated in covered crucibles, or in an iron box, for about five hours, to a temperature of about 900° C. The iron oxide in the ore briquets was all reduced to ferrous oxide and a variable quantity, which might average about 50 per cent., had been reduced to the metallic state by the operation of heating in closed crucibles. With a hematite ore it would be easy to obtain an almost perfect reduction to metal in the preliminary heating, and this would greatly reduce the consumption of electrical energy in the smelting operation.

The baked briquets were smelted in the furnace shown in Fig. 72. After the charge was all melted the heating was continued for about an hour to superheat the steel and make it sound. The slag was then decanted by tilting the furnace and the metal poured into a ladle and from that into molds. The steel varied considerably in its carbon content, and retained a few tenths of a per cent. of titanium. The ingots were usually sound and when cut into bars, sharpened and tempered, could be used directly as lathe tools. These tools were found to cut better than tools of good carbon steel, and sometimes

as well as expensive "quick-cutting" steel. The tools were usually cut from the ingot, or made by pouring the steel into molds of the desired shape, as the steel was frequently too hard for forging; but an ingot of steel with 0.75 per cent. carbon was drawn down successfully under the hammer. When smelting the titaniferous ore it was not necessary to add any ferro-alloy in the furnace or ladle, as the titanium ensured a sound product, but in smelting a pure magnetite ore, the usual additions of ferro-manganese and ferro-silicon were made in the furnace. Using a mixture of 100 parts pure magnetite, 30 parts titaniferous magnetite, 15.5 parts charcoal, 7 parts pitch, 7 parts tar, and 8 parts of lime, a run of 4 1/2 hours, using 23 kw., gave 57 1/2 lb. of steel, corresponding to 0.46 kw. years per long ton, and a second run of 3 hours using 25 kw. yielded 41 lb. of steel. The steel contained 1.55 per cent. carbon, 0.16 per cent. of manganese and 0.65 per cent. of titanium. The electrode loss was equal to 17 lb. per long ton of steel.

In starting the furnace an arc was struck between the end electrodes and when a sufficient quantity of molten metal and slag had been formed, these electrodes were withdrawn, and the vertical electrodes used during the remainder of the heat.

Another method was to use the vertical electrodes during the whole run, a short piece of electrode being laid between their ends for starting the arc. The electrodes were of graphite, 1.5 in. in diameter, being somewhat larger and closer together than those shown in the figure. The furnace was heated as strongly as possible by means of a blowpipe, before each test. The briquets were charged into the furnace through holes in the roof.

The ores used were low in phosphorus and sulphur, and the tests did not throw much light on the elimination of these elements. The titanium in the ore served to remove oxygen and possibly nitrogen from the steel, thus giving a sound product, and the small proportion of titanium that entered the steel gave additional hardness. The amount of titanium in the steel could be controlled by varying the lime in the charge; a basic slag removing more titanium than an acid one. The experiments were decidedly encouraging, but the power available was insufficient, and the furnace could not be operated continuously. A plant has been built at Belleville for testing the process on a small working scale; the first furnace having an output of 1 ton of tool steel per 24 hours.

For the production of tool steel the cost of the process would be sufficiently low even if briquetting were found desirable, and without

any economies such as would be obtained by the use of a shaft furnace. Dispensing with briquetting and assuming a reasonable increase in economy to result from the particular design and larger size of the furnace, steel could be produced commercially for making

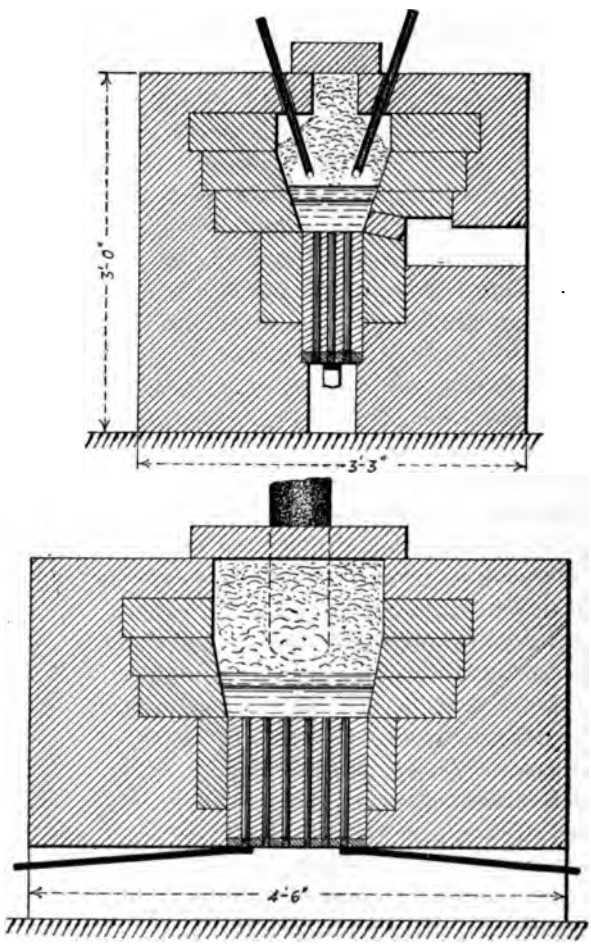

FIG. 111.—Keeney steel furnace.

steel castings, and possibly for structural purposes in competition with open-hearth or Bessemer steel refined in the electric furnace.

Some experiments on the production of steel from iron ore in the electric furnace have recently been made by R. M. Keeney,[1] at the

[1] Keeney, Trans. Iron and Steel Inst., 1912, vol. iv, p. 108.

Colorado School of Mines, as a Carnegie scholarship research for the Iron and Steel Institute. The furnace, Fig. 111, was rectangular in plan, 4 in. by 9 in. at the bottom, and about 8 in. by 12 in. at the top, with a height of 12 in. The furnace was lined with a 4 1/2-in. course of magnesite-brick with an inner lining of magnesite paste. Two graphitized electrodes entered through the top of the furnace and were connected to one pole of the electrical supply; the return electrode being composed of iron rods embedded in magnesite, which form the bottom of the furnace. The graphite electrodes were 6 in. by 1/2 in. in section; this shape being selected with a view to a better distribution of the current. The electric power available was limited to about 10 kw. of 125-cycle alternating current at about 55 volts. The power was taken from the ammeter and voltmeter readings, with an assumed power-factor of 80 per cent.

The ore was a hematite containing 57 per cent. of iron, 9.25 per cent. of silica, 0.12 per cent. of phosphorus and 0.14 per cent. of sulphur. The coke contained 81 per cent. of fixed carbon, 18 per cent. of ash and 0.54 per cent. of sulphur. A charge for soft steel consisted of 6.82 kg. of ore, 1.02 kg. of coke and 3.66 kg. of limestone. The operation lasted for one hour and 40 minutes with an average power of 9 kw.; ten minutes being spent in heating the empty furnace, one hour and ten minutes in smelting the charge, and 20 minutes in heating the reduced charge before tapping. The steel reduced amounted to 3.30 kg., but only 1.22 kg. was tapped as the rest froze in the furnace. The steel contained 0.08 per cent. of carbon, 0.17 per cent. of manganese, 0.07 per cent. of silicon, 0.088 per cent. of phosphorus, and 0.027 per cent. of sulphur. 0.51 of a kilowatt-year was employed per (metric) ton of steel reduced, and the electrode consumption was 18.2 kg. per ton of steel. Eighty-five per cent. of the iron in the charge was reduced and formed steel. Twenty runs were made, yielding steel which varied from 0.08 per cent. to 2.25 per cent. of carbon. The phosphorus varied from 0.01 per cent. to 0.12 per cent., with an average of 0.059 per cent., and the sulphur from 0.02 per cent. to 0.14 per cent., with an average of 0.059 per cent. An average of 77 per cent. of the total phosphorus and 87 per cent. of the total sulphur in the charge was eliminated in the different runs.

In regard to these results it may be mentioned that a further removal of phosphorus and sulphur could easily be effected, on the large scale, by the use of suitable slags in a refining operation at the conclusion of the smelting process. On the other hand, as the heat-

ing was continued in these experiments for some time after the smelting was finished, the elimination mentioned may be better than would be obtained in a furnace that was operating continuously, like a shaft furnace. The consumption of electrical energy per ton of metal reduced varied from 0.44 to 1.11 with an average of 0.57 kw.-years, and the electrode consumption varied from 18 to 67, with an average of 41 kg. per ton of steel reduced. In a large furnace these figures could probably be reduced to 0.30 kw.-years and 15 to 20 kg. of electrodes per ton of steel. Keeney calculates that 0.22 kw.-years are theoretically necessary for the production of 1 ton of steel.

The iron lost in the slags in the various runs was 6.1 per cent. of the iron charged and should not exceed 4 per cent. when operating on a large scale. The direct production of steel from iron-ore has been tested at the plant of "La Neo-Métallurgie" in France on a larger scale,[1] using an arc-furnace of 120 kw. Various ores were used with coke, charcoal and anthracite as reducing materials. The ore was first crushed and briquetted in admixture with the coal or charcoal; later the ore was briquetted alone and charged with charcoal, and finally, the ore and fuel were crushed, mixed and charged without briquetting. The results were the same in each case, except that the rate of smelting became somewhat less in the latter cases, being, for the same power, 35 kg., 32 kg., and 31 kg. of steel per hour, respectively.

Steel was obtained, both low and high in carbon, having very little sulphur and phosphorus, showing a satisfactory elimination of these elements. It is stated that no refining operation was employed but the furnace was of the intermittent type, so that the steel and slag would be heated together in the furnace, after the ore was all reduced. The reduction of hematite with charcoal, to form soft steel, required 3,430 kw.-hours per metric ton of steel, and it was estimated that 2,600 kw.-hours would suffice in a 200-kw. furnace and 2,500 kw.-hours or less in a very large furnace.

SUMMARY OF ELECTRIC STEEL SMELTING

1. Steel can and probably will be made directly from iron-ore.

2. The process will consist of a reducing operation followed by a refining operation.

3. The refining operation is needed partly for the more perfect removal of impurities such as phosphorus, sulphur and dissolved

[1] Revue de Métallurgie, Dec., 1910, p. 1190.

gases, and partly to adjust the proportion of carbon, silicon, manganese and other desirable elements.

4. The reduction will be effected in some form of shaft furnace.

5. The refining will be effected in some form of electric open-hearth furnace, or in a ladle.

6. The furnaces for reducing and refining may be separate, the metal being transferred from one to the other, or they may be combined.

7. In a combination furnace the ore must be held, periodically, in the reducing shaft, while the accumulated steel is refined.

8. In smelting iron-ore to make steel, phosphorus and sulphur in the charge can be largely eliminated from the steel. The removal of phosphorus is more perfect, and that of sulphur less perfect, than in smelting for pig-iron.

9. In consequence of the less perfect removal of sulphur the direct process should be restricted to ores and fuels that are reasonably low in sulphur.

10. In consequence of the better removal of phosphorus, the oxidizing-refining process, usually employed in steel-making, can often be omitted in the direct production of steel, and there is therefore no need to remove the carbon, and then return it again to the steel.

11. In the electric reduction furnace (for pig-iron or for steel), the simple shaft of the blast-furnace should be modified for greater economy in view of the absence of an air-blast, and the consequent lower temperature of the ore in the shaft.

12. This modification may consist of a system of gas circulation, as in the Swedish iron furnaces, or of a system of retorts for heating the charge, as in the Evans-Stansfield steel furnace.

Note.—The author believes that the above statements represent generally the conditions necessary for the direct production of steel in the electric furnace. It is possible that with some particular ore, or combination of ores, steel of suitable chemical composition and mechanical properties may result from the smelting operation without the need of any refining. Even in this case, some slight adjustment of composition would probably be needed which could be effected in a ladle as mentioned in 5.

CHAPTER X

THE FERRO-ALLOYS AND SILICON

The production of iron and steel in the electric furnace is still in its infancy; and will always be limited by the price of electrical energy; but there are many other uses to which this source of heat has long been profitably applied, as has been indicated in the first two chapters. In some of these processes, electrical heat is alone able to produce the required result, while in others the value of the product and the greater economy of the electrical method has enabled it to supplant the older processes, even though the latter employed cheap fuel as the source of heat. Some of these uses of the electric furnace will now be considered, and for convenience the production of the ferro-alloys and silicon will be described in this chapter.

THE FERRO-ALLOYS

The alloys of iron with certain metals, such as manganese, chromium, tungsten and titanium, or with the metalloid silicon, are often known as the ferros, and are usually equivalent to cast-iron, that is iron with a large percentage of carbon, in which part of the iron has been replaced by one of the above metals or metalloids. In some cases, however, carbon is present only in small amounts or not at all, and, on the other hand, more than one of the alloying metals may be present in the same ferro. The ferros are used in the production of steel as convenient means for introducing into the steel the manganese or other metal which they contain; it being usually less costly to obtain these metals as ferro-alloys than in the pure state, and the presence of the iron is not objectionable in additions made to steel; although the carbon, which is also usually present, is sometimes undesirable.

It is well known that many metals such as manganese and silicon, which are hard to reduce, can be more easily obtained in a metallic state when alloyed with iron. Some recent researches in Dr. Hutton's laboratory[1] show that these oxides are reduced to metals at the following temperatures by means of carbon:

[1] Trans. Chem. Soc. (London) XCIII, 1908, pp. 1483, 1496, 327, 2101. Electrochem and Met. Ind. VII 1909, p. 119.

Chromium oxide at	1,185° C.	Silicon oxide at	1,460° C.
Manganese oxide at	1,105° C.	Zirconium oxide at	1,400° C.
Uranium oxide at	1,490° C.	Thorium oxide at	1,600° C.

In the presence of iron and carbon, some of these metals can be reduced at lower temperatures, notably silicon, which is reduced from its oxide, forming ferro-silicon, at about 1,200° C. Manganese is reduced at about 1,030° C. to form ferro-manganese, but the temperature of reduction of chromium is not lowered by the presence of iron.

The ferro-alloys are usually produced in an electric furnace having a carbon hearth, and consequently they contain a certain amount of this element. In some cases furnaces with non-carbonaceous hearths have been employed for these alloys in order to avoid their contamination with carbon. In other cases, the alloy is made in the usual way and then is fused in an electric furnace with oxides of the metals which compose the alloy; this process serving to eliminate most of the carbon by reaction with the metallic oxide.

Paul Girod,[1] in making electric steel, uses a number of compound ferro-alloys, in place of aluminium, for deoxidizing the steel and obtaining sound ingots; he mentions the following alloys:

(1)	Manganese	20 per cent.
	Silicon	20 per cent.
	Aluminium	12 per cent.
(2)	Silicon	40 to 50 per cent.
	Calcium	20 to 30 per cent.
	Aluminium	6 to 10 per cent.
(3)	Silicon	40 to 60 per cent.
	Aluminium	20 to 30 per cent.

While most of the ferro-alloys are produced by reducing the metallic oxide with iron or iron-ore and carbon in an electric furnace, ferro-vanadium may be produced by electrolysis of the oxide in a fused electrolyte of calcium and vanadium fluorides.

This process has been worked out by Gustave Gin[2] who uses a furnace lined with alumina, a carbon anode and a cathode of ferro-vanadium. The metal deposits in a spongy condition on the cathode,

[1] Paul Girod, "The Girod Electric Furnace." Trans. Am. Electrochem. Soc., xv, 1909, p. 138.

[2] Trans. Am. Electrochem. Soc., vol. xv, 1909, p. 227.

and when the deposit is sufficiently large, the furnace is emptied and the deposited metal removed. Gustave Gin also obtains vanadium, as an alloy with iron and silicon, by reducing, in an electric furnace, a mixture of the oxides of iron and vanadium, together with silica and coke; or more easily, by reducing vanadium tri-oxide by means of rich ferro-silicon. For this purpose, 60 per cent. ferro-silicon is powdered and mixed intimately with vanadium tri-oxide, this is agglomerated with 4 per cent. to 6 per cent. of coal-tar pitch, briquetted and smelted in an electric furnace having a magnesite hearth.

The metal manganese resembles iron in many particulars, but is more difficult to reduce from its ores. When the reduction is effected in the blast-furnace, with iron-ore to furnish enough iron to collect and alloy with the manganese, some 2.5 or 3 tons of coke are required to produce one ton of the 80 per cent. ferro-manganese, and about 20 per cent. of the manganese is lost in the slag owing to the imperfect reduction of the ore. Such an operation is very wasteful, both in fuel and in the valuable manganese ore, and the electric furnace is so much more economical in both these particulars, that it can be used in competition with the blast-furnace method. Silicon-eisen, that is low-grade ferro-silicon containing some 10 or 15 per cent. of silicon, can be made in the blast-furnace by using silicious charges and a great excess of fuel, the silicon being derived from the silica in the charge. In the electric furnace, however, using quartz as the source of silicon, with coke to reduce the quartz to the metallic state, and some iron-ore or scrap-iron to alloy with the silicon, an alloy containing as much as 80 per cent. of silicon may be obtained; and the electric furnace ferro-silicon has largely displaced the blast-furnace product, as the cost of the former, per unit of silicon, is so much less. Some other ferro-alloys are also made more cheaply in the electric furnace.

The ferro-alloys may be produced in electric crucible furnaces, such as the Siemens vertical-arc furnace, Fig. 2, or the Héroult ore-smelting furnace, Fig. 78, in which a carbon electrode dips into a carbon-lined receptacle, that forms the other electrode. In such a furnace the alloy will usually absorb a considerable amount of carbon from the lining, and if a carbonless alloy is required, a furnace like the Héroult steel furnace, Fig. 93, should be used, in which two carbon electrodes are employed, which need not touch the molten metal, and the lining of the furnace is not made of carbon.

The production and probable uses of ferro-titanium are discussed by Auguste J. Rossi,[1] who reduces titaniferous iron-ores in the electric furnace, either with carbon or with the assistance of molten aluminium, which serves to reduce the metal from its ore. He has obtained alloys with from 10 to 75 per cent. of titanium, which, when aluminium was used as the reducing reagent, only contained a few tenths of 1 per cent. of carbon. Rossi states that titanium is not really such a bugbear to the iron metallurgist as is usually supposed, but that on the contrary ferro-titanium, added to either pig-iron or steel, markedly improves the mechanical properties of the metal. In the case of steel he suggests that the well-known property of titanium of combining with nitrogen may enable it to remove this gas from the molten metal, and in this way to improve its quality. Ferro-titanium is now made in large quantities by smelting titaniferous iron-ore in an electric arc-furnace.[2] It is used as an addition to cast-iron or to steel mainly as a deoxidizer and cleanser, being usually added in the ladle. Its use has increased very rapidly since the year 1907 when it was first employed. In 1911 some 400,000 tons of steel were treated with ferro-titanium.

The electric furnace product is rich in carbon, containing 5–8 per cent., but a low-carbon alloy can be obtained by reducing the ore with metallic aluminium, and this contains:

Titanium.....	10 to 25 per cent.	Silicon.....	0.35 to 1 per cent.
Carbon	under 1 per cent.	Aluminium.....	5 to 8 per cent.

The manufacture of ferro-nickel, ferro-chrome and other alloys of iron that are used in the production of steel is described by O. J. Steinhart.[3] Ferro-chrome, containing from 50 to 60 per cent. of chromium, was made at one time by heating chromite with charcoal in crucibles, and later in small blast-furnaces, but is now made, almost entirely, in the electric furnace. The Willson Aluminium Company employed 4,000 E.H.P., and turned out 200 to 250 tons per month of ferro-chrome having 5 to 6 per cent. carbon and over 70 per cent. chromium. Their works at Kanawha Falls, W. Va., and their business and patents relating to the manufacture of the ferro-

[1] Rossi, Mineral Industry, vol. ix, 1901, p. 715, and Trans. Am. Inst. Min. Engs., vol. xxxiii, 1903, p. 191.

[2] Titanium Alloy Mfg. Co., 1912.

[3] Steinhart, Trans. Inst. Min. and Met., vol. xv, 1906, p. 228.

alloys have been acquired by the Electrical Metallurgical Company,[1] who also have works at Niagara Falls.[2]

The Girod Ferro-Alloy Works have been described by Dr. R. S. Hutton,[3] who draws attention to the wonderful development of the hydro-electrical installations in the French Alps and the application of this power to electro-metallurgy. The three works of the "Société anonyme Electrométallurgique, Procédés Paul Girod," have the following annual output:

5,000 tons of 50 per cent. ferro-silicon.
1,000 tons of 30 per cent. ferro-silicon.
2,000 tons of ferro-chromium.
800 to 900 tons of ferro-tungsten.
About 50 tons of ferro-molybdenum.
5 to 10 tons of ferro-vanadium.

The value of the alloys sold is more than $1,800,000 per annum. Two grades of ferro-tungsten are produced, "The one containing about 85 per cent. tungsten, and a maximum of 0.5 per cent. carbon, is chiefly employed in the manufacture of crucible tool-steels. The other quality containing 60 per cent. to 70 per cent. tungsten, and 2 per cent. to 3 per cent. carbon is largely used for the manufacture by the open-hearth process of steels containing less than 2.5 per cent. tungsten, which are used for the manufacture of springs, etc." Analyses of typical products of these works are contained in Table XX.

In dealing with these and other products of the electric furnace, it should be remembered that they will sometimes evolve explosive gases if allowed to come in contact with water. This may be due in some cases to small quantities of calcium carbide formed at the high temperature of the electric furnace, but in one case, that of some ferro-silicon, which produced a number of explosions in Liverpool a few years ago,[4] the explosive gas was found to be phosphoretted hydrogen. The alloy was very pure, containing nearly 60 per cent. of silicon, with 2.7 per cent. of aluminium, 0.2 per cent. of carbon, 0.14 per cent. of calcium, 0.17 per cent. of magnesium, and 0.56 per cent. of phosphorus.

Manganese, nickel, chromium, tungsten and other metals can

[1] Electrochemical Industry, vol. v, p. 248.
[2] Electrochemical Industry, vol. v, p. 69.
[3] R. S. Hutton, Electrochemical Industry, vol. v, p. 9.
[4] A. Dupre and M. B. Lloyd, Jour. Iron and Steel Inst., 1904, No. 1, p. 30.

TABLE XX.—ANALYSES OF FERRO-ALLOYS

	Ferro-manganese (blast-furnace)		Spiegel-eisen (blast-furnace)		Silicon-spiegel (blast-furnace)
	Per cent.	Per cent.	Per cent.	Per cent.	Per cent.
Manganese	82.00[1]	80.00[2]	20.40[1]	15.00[2]	19.00[2]
Iron	9.90	12.03	73.20	79.93	66.17
Carbon	6.58	6.80	5.00	4.30	1.65
Silicon	1.00	0.90	1.10	0.50	13.00
Sulphur	Trace	0.02	Trace	0.02	0.08
Phosphorus	0.12	0.25	0.06	0.25	0.10
Arsenic	0.10	.....	0.10	.....	.....

	Ferro-silicon			
	Blast-furnace		Electric-furnace	
	Per cent.	Per cent.	Per cent.	Per cent.
Silicon	14.85[3]	78.80[4]	59.40[5]	31.90[4]
Iron	82.95	12.64	36.85	61.30
Manganese	0.34	0.30	0.08	3.92
Aluminium	.....	4.76	2.73	0.22
Calcium	.....	2.32	0.14	0.79
Magnesium	.....	0.22	0.17	0.26
Carbon	1.66	0.55	0.218	0.50
Sulphur	0.08	0.008	Trace	0.055
Phosphorus	0.12	0.051	0.056	0.027
Chromium	.....	0.16	.....	1.02
Copper	.....	0.04	.....	0.01
Tungsten	.....	0.00	.....	0.25

also be obtained in a carbon-free and nearly pure state, suitable for use in the manufacture of special varieties of steel, by the Goldschmidt process of mixing the oxide of the metal with powdered aluminium and igniting the charge by means of a small primer, which starts the reaction between the oxide and the aluminium. The reaction once started continues throughout the mass, producing an intense heat, which is sufficient to melt the reduced metal and the resulting alumina.

The metalloid silicon, on account of its strong affinity for oxygen, can be used instead of aluminium for the reduction of such metals as

[1] F. W. Harbord, The Metallurgy of Steel, p. 53.
[2] P. Longmuir, Elementary Practical Metallurgy, Iron and Steel, p. 144.
[3] P. Longmuir, Elementary Practical Metallurgy, Iron and Steel, p. 81.
[4] G. W. Gray, Jour. Iron and Steel Institute, 1901, No. 2, p. 144.
[5] G. W. Gray, Jour. Iron and Steel Institute, 1904, No. 1, p. 32.

Ferro-chromium

	Crucible furnace		Electric furnace[1]			
	Per cent.	Per cent.	Per cent.	Per cent.	Per cent.	Per cent.
Chromium	45.0	60.00	67.20	64.17	67.05	65.90
Iron	45.0	30.00	31.35	32.47	27.05	23.44
Carbon	8.6	9.1	0.90	2.34	4.25	8.58
Silicon	c.6	c.5	0.19	0.38	c.60	1.26
Manganese	0.4	0.3	0.12	0.21	0.46	0.44
Aluminium	0.0	0.0	0.00	0.13	0.22	0.18
Magnesium	0.0	0.0	0.19	0.23	0.31	0.14
Sulphur	0.05	0.05	0.006	0.023	0.02	0.02
Phosphorus	0.c5	0.05	0.c21	0.02	0.02	0.02

	Ferro-tungsten (Electric furnace)[1]			Ferro-vanadium (Electric furnace)[1]	
	Per cent.	Per cent.		Per cent.	Per cent.
Tungsten	85.15	71.8c	Vanadium	52.80	34.10
Iron	14.12	24.35	Iron	45.84	64.22
Carbon	0.45	2.58	Carbon	1.04	1.42
Silicon	0.13	0.36	Silicon	0.09	0.12
Manganese	0.085	0.78	Aluminium	0.00	0.00
Sulphur	0.021	0.02	Sulphur	0.025	0.03
Phosphorus	0.018	0.008	Phosphorus	0.02	0.009

Ferro-molybdenum (Electric furnace)[2]

	Per cent.	Per cent.
Molybdenum	79.15	83.80
Iron	17.52	12.72
Carbon	3.24	3.27
Sulphur	0.021	0.02
Phosphorus	0.028	0.027

Ferro-titanium (Electric furnace).[2]

	Per cent.
Titanium	15 to 18
Iron, about	76
Carbon	5 to 8
Silicon	0.35 to 1
Sulphur	Trace
Phosphorus	Trace

[1] R. S. Hutton, Electrochemical Industry, vol. v, p. 10.
[2] Titanium Alloy Mfg. Co., 1912.

chromium, tungsten and molybdenum from their oxides, and for obtaining alloys of these metals with iron or nickel. Mr. F. M. Becket[1] has patented this process, and describes the production of ferro-chrome, low in carbon and silicon, by feeding a mixture of chromite and metallic silicon into an electric furnace. The oxides of iron and chromium, contained in the chromite, are reduced to the metallic state by reacting with the silicon according to the following equations:

$$2Cr_2O_3+3Si=4Cr+3SiO_2.$$
$$2FeO+Si=2Fe+SiO_2.$$

The silica resulting from the reaction is slagged off by the basic impurities present in the chromite. An excess of the chromite is used to prevent any of the silicon remaining unoxidized and alloying with the ferro-chrome.

Mr. Becket[2] also patents the use of silicon or ferro-silicon for reducing metals, particularly the metals molybdenum and vanadium, from their sulphide ores. The following equation shows the action when silicon and molybdenite are used:

$$MoS_2+Si=Mo+SiS_2.$$

Mr. E. F. Price[3] has also secured a patent for the production of low-carbon ferro-chromium, etc., by the use of ferro-silicon. He obtains ferro-silicon in an electric furnace and then taps it into a second electric furnace, where it is made to react with the chromite, for the production of ferro-chrome.

A paper by R. M. Keeney,[4] "Electric Smelting of Chromium, Tungsten, Molybdenum and Vanadium ores," which has just appeared, gives a good account of these processes.

Ferro-silicon[5] is made by smelting, in an electric furnace, a mixture of silica, carbon and iron or iron-ore. Originally iron-ore was generally employed but now it is more usual to employ turnings of steel or wrought-iron. Silica is supplied in the form of quartz or quartzite, instead of sand which would be liable to choke the

[1] F. M. Becket, U. S. patent 854,018, Electrochemical Industry, vol. v, p. 237.
[2] F. M. Becket, U. S. patent 855,157, Electrochemical Industry, vol. v, p. 237.
[3] E. F. Price, U. S. patent, 852,347, Electrochemical Industry, vol. v, p. 278.
[4] R. M. Keeney, Am. Electrochem. Soc., xxiv, 1913.
[5] British Government Report on Manufacture, Uses and Transport of Ferro-silicon, by S. M. Copeman, S. R. Bennett and H. W. Hake, Met. and Chem. Eng., viii, 1910, p. 133 (also see p. 115).

furnace. Anthracite coal is generally used as the source of carbon, but sometimes gas coke is employed. Anthracite is preferable to coke because the latter is so good an electrical conductor that it is not easy when using it to obtain a sufficiently high electrical resistance in the furnace.

The materials employed should be as pure as possible, and in particular should be free from phosphorus and arsenic, as ferro-silicon containing these elements is apt to form poisonous and explosive gases.

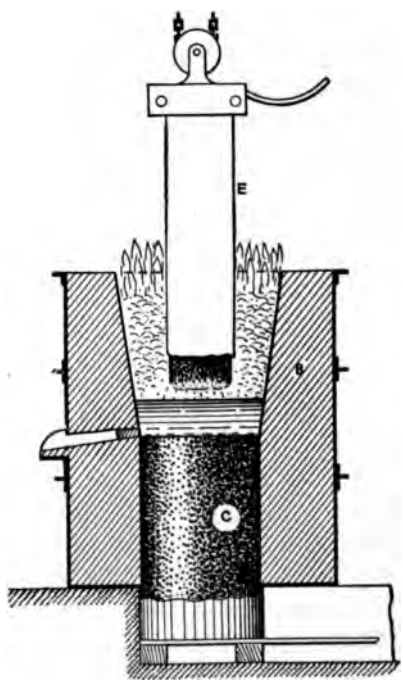

FIG. 112.—Ferro-silicon furnace.

A furnace used for making ferro-silicon is shown in Fig. 112. It is usually circular in plan, built of fire-bricks, *B*, in an iron or steel casing, and often having a lining of carbon. The upper electrode is of carbon, square in section, and having a water-cooled electrode-holder, and an iron casing, *E*, to prevent wasting and oxidation. The lower electrode, *C*, passes through and fills the bottom of the furnace. It may be formed *in situ* by ramming retort-carbon and tar. The voltage employed varies from about 40 to 75 volts and

the current from 10,000 to 15,000 amperes; the power used varying from 250 or 300 h.p. up to 750 or 800 h.p.

At the Keller Leleux works the Keller furnace is employed (see Fig. 79). This furnace is equivalent to two furnaces built together and coupled electrically in series, thus dispensing with the lower electrodes.

In making up the charge for the furnace, silica and carbon are added in the proportion given by this equation:

$$\begin{array}{l} SiO_2 + 2C = Si + 2CO \\ 60 + 24 = 28 + 56 \end{array}$$

Iron is added in amount depending on the percentage of silicon that is desired. The higher the grade of ferro-silicon, the smaller would be the amount of iron to be added. Allowance must, of course, be made for the impurities in the quartz, anthracite and iron employed. Thus in making a 50 per cent. ferro-silicon from quartzite containing 96 per cent. silica, and anthracite of 82 per cent. carbon, 10 per cent. ash and 8 per cent. water and gases, the following charge would be used:

Quartzite	150 kg. =	144 kg. SiO_2 or 66 kg. silicon.
Anthracite	72 kg. =	59 kg. carbon and 7 kg. of silica, alumina, etc.
Steel turnings	55 kg. =	54 kg. iron.
	277 kg.	

This charge should yield about 66 kg. of silicon and 54 kg. of iron, but as the loss of silicon through imperfect reduction and by volatilization will be greater than the loss of iron, the resulting alloy will contain about 50 per cent. of silicon.

The quartz and anthracite are crushed to nut size, mixed with the steel turnings in correct proportions and shovelled into the furnace. The furnace operates continuously and the ferro-silicon is tapped into sand moulds at intervals; the slag being skimmed off the molten metal in the mold by a log of wood.

The production of ferro-silicon is described by Albert Keller,[1] who states that at Livet, with 4,000 h.p., he was able to turn out 20 tons of 30 per cent. ferro-silicon per day, and that 1 ton of the alloy requires 3,500 kw.-hours for its production from quartz, scrap-iron and coke, the furnaces being each of 650 h.p.

[1] Keller, Jour. Iron and Steel Inst., 1903, vol. i, p. 166.

The British Coalite Co. at their Wednesfield experimental station,[1] made ferro-silicon from a sandstone rock, precipitated ferric oxide, pitch and 10 per cent. of anthracite. The crushed sandstone, iron oxide and anthracite were mixed together with the pitch and heated to drive off the volatile hydrocarbons. The product was broken into small lumps and smelted in the furnace. This use of pitch ensures an intimate mixture of carbon with the silica and iron oxide, and the mass has a suitable electrical resistance for use in the furnace. The ferric oxide and pitch were both by-products from other processes.

Ferro-silicon is usually made in an electric furnace like that shown in Fig. 112, in which the hearth of the furnace is made of carbon and forms an electrode. Even in the presence of an abundance of carbon, ferro-silicon does not take up a large percentage of this element. A sample of ferro-silicon produced in a blast-furnace only contained 1.6 per cent. of carbon; silicon having the effect of preventing carbon from combining with iron. Ferro-silicon produced in the electric furnace contains only a few tenths per cent. of carbon as shown in Table XX.

Fig. 113 represents a ferro-silicon furnace for 4,000 to 6,000 kw., in which three electrodes are provided for a three-phase supply. The furnace is lined with carbon, but the lining does not form one electrode (as in Fig. 112). On account of the difficulty of drilling through the solidified slag with a steel bar, in order to tap the ferro-silicon, a tapping electrode is used, mounted on a carriage, *A*, and supplied with current through the cable, *K*. The figure shows how the transformers, *T*, can be protected from the heat and dust, and yet can be placed near to the furnace so that a moderate length of cables will serve to connect them to the electrode holders. *V* is a fan for cooling the transformers, and *W* is a motor for raising the electrodes.

The Helfenstein three-phase furnace[2] consists of three or more shafts, placed side by side, each having its own vertical top electrode, but all being connected together electrically by a common conducting bottom which forms the bottom electrode of each shaft. The furnace top is closed, having provision for feeding the charge and adjusting the electrodes without allowing the gases to escape. These furnaces are made to take 12,000 H.P. in three shafts.

A recent invention of Mr. Tone[3] relates to the fusion in the elec-

[1] Met. and Chem. Eng., viii, 1910, p. 134.
[2] Met. and Chem. Eng., x, 1912, p. 686.
[3] Electrochem. and Met. Ind., vii, 1909, pp. 35 and 192.

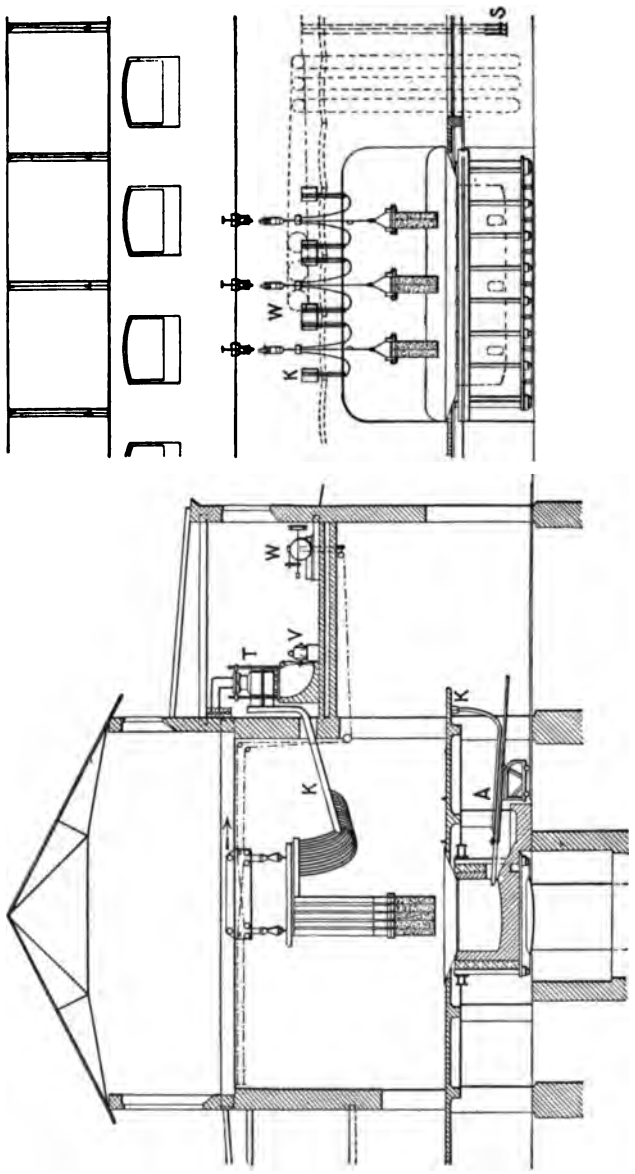

FIG. 113.—Three-phase ferro-silicon furnace.

tric furnace of clay with iron and coke; the amount of coke being just sufficient for the reduction of the silicon in the clay. The silicon is reduced and mixes with the iron in the charge, forming ferro-silicon. The remainder of the clay is alumina, and this melts, forming the product alundum, or, as it is called when produced by this process, Aloxite.

Many serious accidents have occurred in connection with the storage and transportation of ferro-silicon. This substance is liable to give off poisonous and inflammable gases; people have been killed by breathing these gases, and explosions have taken place, due to their spontaneous ignition.

The gas evolved is mainly phosphoretted hydrogen, due to the action of damp air on calcium phosphide in the alloy, and to a less extent arseniuretted hydrogen. These gases are very poisonous and ignite spontaneously or very easily; for example by means of a spark caused by friction between the pieces of metal. In order to diminish this danger the materials used in the manufacture of ferro-silicon should be as free as possible from phosphorus and arsenic. Thus, for example, iron or steel turnings should be used instead of cast-iron turnings, as the latter contain a larger amount of phosphorus.

It has been found that certain grades of ferro-silicon are liable to spontaneous disintegration, and some even crumble to powder after a few weeks or months; this disintegration being usually accompanied by the evolution of evil-smelling and poisonous gases. The grades that are at all liable to this are from 30 per cent. to 40 per cent. and from 47 per cent. to 62 per cent. of silicon. It has therefore been recommended that ferro-silicon should be made with silicon contents above 70 per cent. or below 30 per cent., as it is found that these grades are perfectly safe to store and handle.

In handling any other grades, it is desirable to break up the ferro-silicon and to store it in a dry, well-ventilated place for a month before shipment. In shipping by sea it should be placed on deck if possible, failing which it must be in a well-ventilated place, separated from inhabited parts of the vessel.

SILICON

It has been estimated by Dr. F. W. Clarke[1] that silicon forms 27.4 per cent. of the contents of the solid crust of the earth. It

[1] Dr. F. W. Clarke, of the United States Geological Survey. Quoted in Electrochemical Industry, vol. iii, p. 409.

exists in combination with oxygen as silica, which constitutes, according to this estimate, 58.3 per cent. of the earth's crust. Although so widely distributed, silicon has so strong an affinity for oxygen that until recently it could only be obtained in small amounts.

Alloyed with certain metals, silicon has long been of metallurgical importance. Ferro-silicon, already referred to, has been employed in the manufacture of steel as a deoxidizer and to prevent the formation of blow-holes in steel ingots. Cast-iron contains a small amount of silicon, which has a very great effect on the properties of the iron.

Silicon is formed by the action of carbon on silica in the electric furnace at a temperature which has been stated to be 1460° C.;

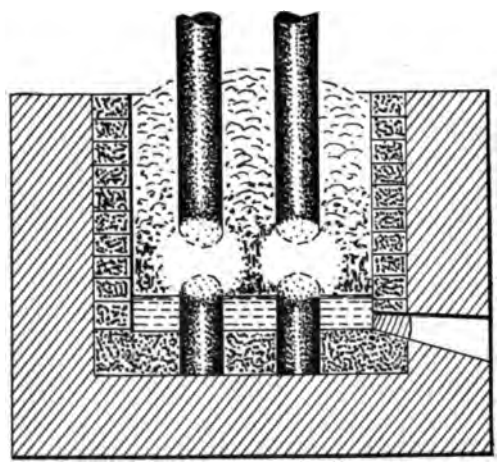

FIG. 114.—Tone's arc furnace for silicon.

but a higher temperature is probably essential for a rapid reduction of this metalloid. It is not easy to obtain silicon in this manner because it is volatile at the temperature of its formation, and because it easily forms a carbide, so that unless great care is taken, the silicon is largely lost by volatilization and what is obtained is contaminated by admixture with the carbide SiC.

The reduction of silica to silicon has been carried out successfully by Mr. F. J. Tone.[1] His first furnace, which is shown in Fig. 17, was a resistance furnace. He used this form of furnace because the

[1] F. J. Tone, Production of Silicon in the Electric Furnace. Trans. Amer. Electrochem. Soc., vol. vii, 1905, p. 243; Production of Silicides and Silicon Alloys, U. S. patent 842,273; See Electrochemical Industry, vol. v, p. 141.

temperature could be regulated better in it than in an arc-furnace, and the volatilization of the silicon and the formation of carbide of silicon would therefore be less. More recently Mr. Tone has employed arc-furnaces which are designed to permit the collection of the silicon in the bottom of the furnace; this being at a far lower temperature than that of the arc, but still above the melting temperature of silicon. One form of this furnace is shown in Fig. 114. There are four vertical carbon electrodes; electrical connections being made to the upper electrodes, and the lower electrodes being connected together through the carbon lining of the furnace. In this way two arcs are produced in the middle of the charge, which is a mixture of quartz and coke. The silicon volatilizes as soon as it is formed, and condenses in the porous mass. It then filters down through the charge to the bottom of the furnace, from which it is tapped at intervals.

A modified form of this furnace,[1] has a horizontal carbon grid placed across the furnace, below the level of the arcs, so as to support the charge and maintain a clear space for the collection of the silicon in the bottom of the furnace.

A furnace, designed by Seaward Kouglegan,[2] consists of a fire-brick chamber having a carbon hearth and two depending electrodes. The silicon collects on the hearth and serves to carry the electric current from one electrode to the other. The electrodes have each a cross-section of 4 sq. ft. for a furnace using 15,000 amperes at 30 volts. The charge consists of flint rock, broken to the size of 1 in., and coke crushed to pass through a 10-mesh sieve. In starting the furnace, 75 parts of flint rock are used with 25 parts of coke, this proportion furnishing an excess of silica. Later 70 parts of flint rock are used with 30 of coke, which indicate a small excess of silica over the theoretical proportion of 5 parts of silica to 2 parts of carbon. The patent specification indicates an arc between each electrode and the molten silicon, but as this would cause the silicon to volatilize, it is probable that the arcs are not actually in contact with the molten product.

The furnaces in use at the Acheson Carborundum Works[3] have two depending electrodes, which extend to a considerable depth into the charge of coke and sand. The furnace is built of fire-brick

[1] F. J. Tone, U. S. patent 937,120, Oct. 18, 1909, and Electrochem. and Met, Ind., vii, 1909, p. 495.

[2] Seaward Kouglegan, Electrochem. and Met. Ind., vol. vii, 1909, p. 223.

[3] Electrochem. and Met. Ind., vii, 1909, p. 192.

and is lined with carbon. Each furnace uses 1,200 h.p. and the silicon is tapped every few hours in ingots of 600 to 800 lb.

Apparently the present type of silicon furnace is a simple chamber constructed of brickwork and lined with carbon. It has two or three depending electrodes and the current passes between these through the white-hot charge and the molten silicon which collects in the bottom of the furnace. The electrodes will be raised so high in the furnace that the silicon will not be overheated, and a thick covering of charge will be maintained to act as a filter and condenser to prevent losses by the escape of silicon vapor with the carbon monoxide.

H. N. Potter[1] has patented a process for the production of silicon from a mixture of silica and silicon carbide according to the equation:

$$SiO_2 + 2\ SiC = 3Si + 2CO.$$

The silicon produced is liable to be contaminated with silicon carbide, but this is eliminated by reaction with a bed of silica on which the molten silicon collects.

Silicon produced in the electric furnace[2] is a brittle crystalline body with a dark silver luster. Its specific gravity is 2.34 and it melts at 1,430° C. It is not pure, however, but contains about 1 per cent. of iron, 1.5 per cent. of aluminium, and 2 per cent of carbon.

The heat of oxidation of silicon has been determined by Dr. H. N. Potter,[3] who gives 215, 692 calories as the heat formation of 1 grm. molecule of silica. Using this figure it can be shown that the oxidation of silicon affords more heat per unit weight of oxygen than the oxidation of any of the metals except aluminium and the alkaline earth metals such as magnesium and calcium. The great affinity of silicon for oxygen has enabled it to be used for the reduction of metals such as chromium and tungsten in the electric furnace.[4]

Silicon is made commercially in grades containing from 90 to 97 per cent. of silicon, as shown by the following analyses:

[1] H. N. Potter, U. S. patent 908,130, Dec. 29, 1908, and Electrochem. and Met. Ind., vii, 1909, p. 86.

[2] F. J. Tone, Production of Silicon in the Electric Furnace. Trans. Am. Electrochem. Soc., vii, 1905, p. 243.

[3] H. N. Potter, Trans. Amer. Electrochem. Soc., vol. xi, abstracted in Electrochemical Industry, vol. v., p. 229.

[4] F. M. Becket, patents described in Electrochemical Industry, vol. v, p. 237. Trans. Amer. Electrochem. Soc., vol. vii, p. 249.

	Per cent.	Per cent.
Silicon	90.60	95.71
Iron	6.70	2.24
Manganese	0.08	.....
Aluminium	2.35	1.96
Phosphorus	0.02	0.01
Carbon	0.22	0.08
Sulphur	0.00	0.00

The 90-per cent. grade is largely used in steel-making, replacing the higher grades of ferro-silicon. Silicon is also employed, instead of aluminium, as a reducing agent in the manufacture of low-carbon ferro-alloys by the "thermit" process.

Silicon is produced commercially in large quantities by the Carborundum Company at Niagara Falls.[1] It is of great value on account of its resistance to acids and it can now be cast in the various shapes needed in the chemical industry. Cast silicon has a density of 2.5 to 2.6, an electrical resistivity of 0.15 ohms per centimeter cube at 18° C., decreasing rapidly with rise of temperature; it melts at 1,430° C., and its boiling-point has been determined (by calculation) to be 2,800° C.

Silicon-copper, an alloy of silicon, is used as a deoxidizer in making castings of copper and copper alloys, in the same way that the ferro-alloy of silicon is used in making steel castings. Silicon-copper is made in the electric furnace by the Cowles Electric Smelting and Aluminium Company, at Lockport, N. Y.[2]

[1] Electrochem. and Met. Ind., vii, 1909, p. 192.
The Carborundum Company Catalogue of Cast Silicon Chemical Ware.

[2] Silicon-copper in the Brass Foundry, Electrochemical Industry, ii, 1904, p. 121.

CHAPTER XI

GRAPHITE AND CARBIDES

The production in the electric furnace of graphite and of several carbides, particularly carborundum and calcium carbide, will be considered in this chapter.

GRAPHITE

The elementary substance carbon exists in nature in three distinct forms: Amorphous carbon, graphite and the diamond. Amorphous carbon exists in a nearly pure state in such substances as charcoal, lampblack, petroleum-coke, and the ordinary electric-light carbons. Graphite derives its name from its property of marking paper, and is largely used for this purpose in the common "lead pencil." Plumbago and black-lead are other names for graphite, which date from a time before the true nature of graphite had been discovered, and when it was supposed to be closely related to lead and certain of its ores.[1] Natural graphite is classified as crystalline and amorphous; the former occurs in flakes or flaky masses and can easily be freed from associated earthy matter, while the latter, which must not be confused with amorphous carbon, mentioned above, does not occur in flakes, and is therefore not so easily separated from the clayey and other impurities with which it is frequently intimately associated.[2] Crystalline graphite is largely used in the manufacture of pencils, crucibles and lubricants, while the less valuable amorphous graphite is utilized for paints and foundry facings. The graphite from the Borrowdale mines in Cumberland, although amorphous, was famous for many years as the best for making pencils; being of great purity.

The diamond, the remaining form of carbon, is remarkable for its great hardness, its crystalline form, and its transparency when pure. It has been produced artificially by crystallization under pressure from a solution of carbon in molten iron, but the process has not attained any commercial success.[3]

[1] Graphite: its formation and manufacture, by E. G. Acheson, Jour. Franklin Institute, 1899.

[2] Graphite, by E. K. Judd, Mineral Industry, vol. xiv, p. 309.

[3] Artificial diamonds, Electrochemical Industry, vol. iv, p. 343.

Graphite differs from amorphous carbon in the following particulars: It has a somewhat higher specific gravity, it is a better electrical conductor, and is less easily oxidized by air at a red-heat or by certain chemical reagents. Its greater resistance to oxidation enables it to be used in the manufacture of crucibles, and this and its good electrical conductivity render it valuable as a material for electrodes for various electro-chemical and electric-furnace operations.

It has been known for a long time that amorphous carbon and the diamond could be converted into graphite by exposure to very high temperatures and in other ways. The conversion of amorphous carbon into graphite by the action of heat is only accomplished at the highest temperatures of the electric furnace, and even then not readily.[1] When, however, some metal like iron or nickel, which has the property of dissolving carbon when in the molten state, is saturated with that substance, and then allowed to cool slowly, the carbon will crystallize or separate from the cooling metal as flakes of graphite. The separation of graphite from molten pig-iron can be noticed very easily in a blast-furnace casting house. The method by which large amounts of graphite are now artificially produced depends on the formation of carbides of iron, silicon, etc., and the subsequent decomposition of these carbides at a still higher temperature; the iron, etc., being driven off in the state of vapor, leaving the carbon in the form of graphite and of a high degree of purity.

The decomposition of carbide of silicon yielding graphite in the hottest part of the carborundum furnace had been noticed by Dr. Acheson who investigated the matter and found that pure forms of carbon were only slightly changed into graphite in the electric furnace, but that impure carbon such as ordinary coke, or carbon to which certain substances such as iron oxide, silica, or alumina had been added, were largely converted into graphite. Dr. Acheson patented the electric-furnace production of graphite in 1896[2] and

[1] F. J. FitzGerald, The Conversion of amorphous carbon to graphite, Jour. Franklin Institute, 1902.

W. C. Arsem, "Transformation of Other Forms of Carbon into Graphite." Trans. Am. Electrochem. Soc., xx, 1911, p. 105.

[2] E. G. Acheson, U. S. patent 568,323, Sept. 29, 1896. Converts carbonaceous materials such as mineral coal, coke, charcoal, gas-carbon and carbides into practically pure graphite, by employing a material containing a considerable proportion of mineral matter, or mixing it with an oxide or oxides, such as silica, clay, alumina, magnesia, lime or iron oxide, and heating the mixture in an electric furnace, Electrochemical Industry, vol. iii, p. 482.

its commercial development has been so rapid that in 1905 the production of artificial graphite was greater than the whole output of natural crystalline graphite in the United States. During the years 1907–09 the annual output of Acheson graphite was 7,000,000 lb.

The electric-furnace production of graphite[1] is illustrated in Figs. 115 and 116; the former showing a furnace for the conversion of anthracite into bulk graphite, while the latter illustrates the graphitization of electrodes or other articles of amorphous carbon.

Anthracite has been selected as the most suitable material for the production of graphite in bulk; the impurities which are disseminated through it serving as carbide-forming materials which render possible its conversion into graphite. The graphite furnace consists, as is shown in Fig. 115, of a long trough which contains the anthracite, and of two electrodes which are situated at the ends of the furnace. As the cold anthracite is a very poor conductor of electricity, a core, *C*, of carbon rods is needed to carry the current, until the charge becomes heated. The furnace consists of a permanent base, *B*, and end walls, *AA*, which support the electrodes. The side walls, *DD*, are not permanent but can be pulled down after a run. The base of the furnace is shown supported on bricks so as to allow of air-cooling, but this precaution is not always taken. The electrodes are made of a number of graphite rods, *E*, which are set in a block of carbon as shown in the sketch; electrical contact being made by a terminal plate, *L*, which may be water-cooled. Above the charge of anthracite, *H*, is placed a cover, *K*, of some good heat-insulating material, which should also be a very poor conductor of electricity.

A view of this furnace in operation is shown in Fig. 117,[2] which shows clearly the arrangement for air-cooling the hearth, the massive end-walls, and the electrical connections for supplying a current of

[1] E. G. Acheson, U. S. Patent 645,285, March 13, 1900. Producing graphite by heating anthracite, etc., Electrochemical Industry, vol. iv, p. 42.

Manufacturing graphite, British patent 2,116, of 1901, by O. Imray, of the International Acheson Graphite Company, Electrochemist and Metallurgist, vol. i, p. 131.

Manufacturing of artificial graphite from charcoal, J. Weckbecker, illustrated account, Electro-chemical Industry, vol. ii, p. 244.

Process of Making Graphite, E. G. Acheson, U. S. patent, 711,031, Electrochemical Industry, vol. i, p. 130.

[2] Reproduced from "Acheson Graphite," a catalogue of the International Acheson Graphite Company.

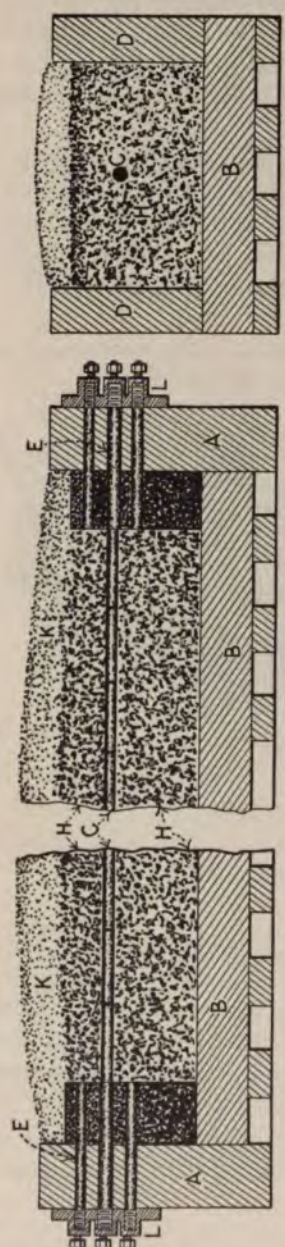

FIG. 115.—Acheson graphite furnace.

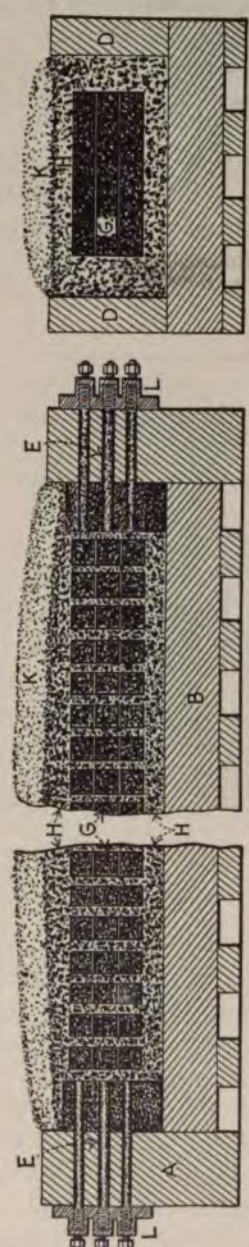

FIG. 116.—Acheson electrode furnace.

perhaps 15,000 or 20,000 amperes to the furnace. The two sets of "bus-bars," supplying the electric current to a number of furnaces, run close together to reduce the inductance of the circuit, and the connection to one electrode is carried through a trench under the furnace.

In an account of this furnace written in 1902 by Prof. J. W. Richards,[1] it is said to be 30 ft. long and formed of a trough 2 ft. square, lined on bottom and sides with blocks of compact carborundum 6 in. thick. Such a furnace held a charge of about 6 tons of anthracite coal, ground to the size of rice, and this was graphitized in twenty

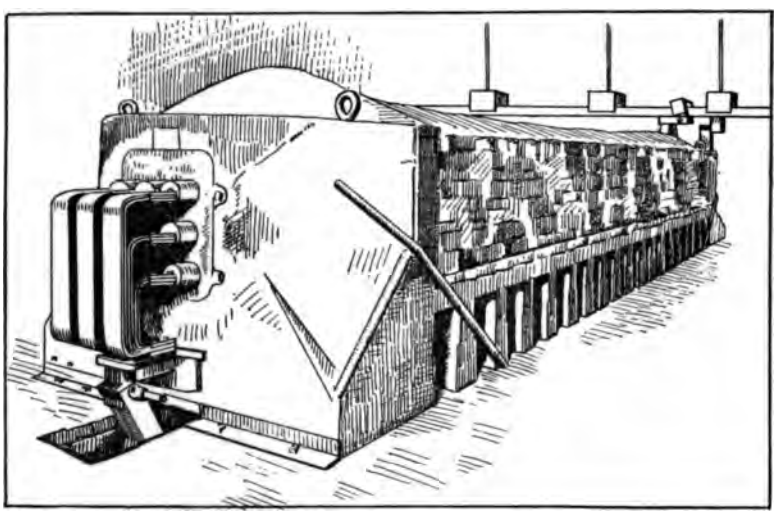

FIG. 117.—Acheson graphite furnace.

hours. The author is informed by the Acheson Graphite Company that no refractory lining is now employed. As the temperature of formation of graphite in this furnace is over 2,000° C., it must be well above the melting-point of ordinary fire-clay bricks, and a furnace such as is shown in Fig. 115 could only be operated if the bottom and walls were composed of or lined with some specially refractory material, or if it were possible to leave a layer of unconverted anthracite between the furnace walls and the remainder of the charge.

[1] The Electrochemical Industries of Niagara Falls, J. W. Richards, Electrochem. Industry, vol. i, p. 52.

By increasing the cross-section of the charge there would be less danger of the walls becoming over-heated and the graphitization of the central portion of the anthracite might still be effected provided the electric current could be concentrated on this portion instead of spreading over the whole of the cross-section. At the beginning of the run the current will pass almost entirely through the core of carbon rods, and when this conducting core is augmented by the conversion of the surrounding anthracite into graphite, its electrical resistance will become so low that there will be little tendency for the current to pass through the outer portions of the charge.[1]

The electrode furnace,[2] Fig. 116, resembles the graphite furnace in construction. The electrodes, *G*, or other articles to be graphitized are placed in piles with their length across the length of the furnace, in order to keep the electrical resistance as high as possible. They are surrounded by broken coke, *H*, which has a moderately high resistance, so that most of the heat is developed in the parting layers of coke, and the current will tend to pass through the electrodes in the middle of the furnace, rather than through the outer parts of the furnace which are filled with the broken coke. The coke will consequently serve as a jacket to retain the heat and prevent the over-heating of the walls of the furnace. The dimensions of the furnace depend upon the size of the electrodes, which can be as much as 4 ft. in length. A cover of some heat-insulating substance is employed, but there is no refractory lining of carborundum, etc., such as was described in the patents and earlier accounts.

In the plant of the International Acheson Graphite Company at Niagara Falls there were in 1906 six furnaces of 750 or 800 kw., and ten furnaces of 1,600 kw. The total power employed was 2,400 kw., operating one furnace of each size; the other furnaces being in process of cooling, emptying or recharging. Each furnace takes about half a day to heat, and four or five days to cool. The total

[1] Compare the account of the manufacture of soft graphite, where an outer portion or jacket of poorly conducting material is provided.

[2] Graphitizing electrodes and other carbonaceous articles. Patent application, November 23, 1900, with illustration of electrode furnace. Electrochemist and Metallurgist, vol. i, 1901, p. 54.

The Ruthenburg and Acheson Furnaces, F. A. J. FitzGerald, Electrochemical Industry, vol. iii, p. 417.

E. G. Acheson, U. S. patent 617,979, January 17, 1899, and 702,758; June 17, 1902, Graphite electrodes, etc. Mentions current and size of furnace, Electrochemical Industry, vol. iv, p. 42.

output of the plant in 1906 being nearly 6,000,000 lb. of graphite. At the present time the furnaces take 4,000 E.H.P. or 3,000 kw. The electrical current is supplied at a voltage of 2,200. This is transformed to a current at 200 volts, and the voltage is further lowered by a special regulator as the resistance of the charge decreases during the run, so that all the available power can be applied during the whole period. J. W. Richards stated in 1902 that for the electrode furnaces the current was 3,000 amperes at 220 volts to begin with, and 9,000 amperes at 80 volts at the end of the operation. The current flowing through the 1,600-kw. furnaces must be about twice as large as this.

The conversion of amorphous carbon into graphite in the Acheson furnace is supposed to be due to the formation and subsequent decomposition of carbides of the iron and other metals contained in the charge. It should be noted, however, that the amount of iron, aluminium, calcium, etc., contained in the anthracite, or specially added to the electrodes, is not nearly enough to combine with all the carbon to form carbides, as the ash or impurity in anthracite varies from about 5 per cent. to about 15 per cent., and the amount of iron-ore, etc., which is added to the electrode material in order to enable the manufactured electrode to be graphitized is only 2 per cent. or 3 per cent. These metals may be expected to serve for more than one equivalent of carbon, because when the central part of the furnace has become hot enough to dissociate the carbides that had formed there, the volatilized metals will escape to cooler zones, and will again form carbides with the carbon at that point; but this explanation hardly accounts for all the carbon that is graphitized through the agency of a very small amount of added metal, although it undoubtedly explains in part the great effect of these added bodies. Another factor will be found in the consideration that dissociation and reformation of the carbides is always taking place at temperatures below that of the final splitting up of these bodies, and that in this way the small amount of metal can eventually form carbides with all the carbon in the furnace. From this point of view, time would appear to be an essential element in the conversion of carbon into graphite, and this is probably the case, although at the high temperature of the graphite furnace these molecular combinations and dissociations will, no doubt, take place with great rapidity.

The character and uses of Acheson graphite are fully described in a series of pamphlets issued by the International Acheson Graphite

Company,[1] and in other published papers,[2] from which the following points may be summarized. The density of natural graphite, and of the Acheson graphite electrodes is 2.2, while the density of amorphous carbon electrodes is 2.00. The graphite electrodes are very pure, containing only about 0.5 per cent. of impurity.[3] The electrical conductivity of the graphite electrodes is about four times that of amorphous carbon electrodes, and the cross-section of an electrode can be proportionately decreased when the graphite variety is employed. Graphite electrodes are found to have a far longer life than those of amorphous carbon when used in a variety of electrolytic processes; the rate of corrosion and disintegration being very much less.[4] The graphite electrodes have another valuable property, namely, that of easy cutting or machining.[5] Electrodes of amorphous carbon are very difficult to cut, and must usually be molded into any required shape, while the Acheson graphite electrodes can be cut with a saw, drilled, threaded, etc., so that all kinds of shapes can readily be prepared from rods or slabs of the graphite. In particular, it is possible to avoid wasting the ends of electrodes, by the use of threaded connections, as in Fig. 48, so that when an electrode becomes too short for further use, another is attached to its outer end, and the lengthened electrode can be fed steadily forward into the furnace or electrolytic tank without interruption of the process or waste of electrode. In electrolytic work, composite electrodes are often used; a slab of graphite serves as the working electrode, being immersed in the

[1] Acheson Graphite Electrodes. Pamphlet by The International Acheson Graphite Company.

[2] Graphite Electrodes in Electrometallurgical Processes. C. L. Collins, Amer. Electrochem. Soc., vol. i, p. 53.

Uses of Acheson Graphite in Metallurgical Research, W. McA. Johnson, Electrochemical Industry, vol. ii, p. 345.

Graphite electrodes for electric furnace work, Electrochemical Industry, vol. iv, p. 513. The Acheson Graphite Company supplied 2,404,171 lb. of graphitized electrodes during the year ending July 1, 1906.

[3] The pamphlet on Acheson Graphite Electrodes, dated 1902, states that the percentage of impurities averages about 1 part in 1,000, and quotes an experiment in which their electrodes yielded 0.8 per cent. of ash. A later leaflet on Acheson Graphite states that the electrodes contain 99.5 per cent. of pure graphitic carbon.

[4] Graphite Electrodes in Electrolytic Work, by C. L. Collins, Electrochemical Industry, vol. i, p. 26.

[5] Adaptability of Acheson Graphite Articles, or Ease of Machining. Acheson Graphite Company, 1904, and paper by C. L. Collins, Electrochemical Industry, vol. ii, p. 277.

electrolyte, and one or more graphite rods which are threaded into the slab, serve to support it and lead in the electric current.

Dr. Acheson succeeded, in the year 1906, in producing a specially soft variety of graphite which is found to be a very efficient lubricant.[1]

It is made in the electric furnace from anthracite or other form of amorphous carbon to which a larger amount than usual of carbide-forming material has been added. Silica is preferred for this purpose because it does not form a fusible carbide. The amount added is far greater than in the manufacture of graphite electrodes, or in the conversion of carbon into bulk graphite, but it is less than would be required for making a carbide with the whole of the carbon. The following specific case is contained in the patent application:[2]

"An electric furnace, having a length of 18 ft. between terminal electrodes, was provided with a starting core consisting of a graphite rod 7/8 in. in diameter. The active zone, 18 in. in diameter, surrounding this core, was filled with a mixture of carbonaceous material and carbide-forming oxide. The materials used in this specific instance were anthracite coal, ground to pass through a 1/2-in. mesh, mixed with sand, in the proportion of 65 per cent. coal and 35 per cent. sand, the ash contained in the coal being calculated as a part of the sand-content of the mixture. Completely surrounding the active zone above referred to was disposed a mixture of anthracite coal and sand, in the proportion of 1 part coal to 2 parts of sand, this mixture having a much higher resistance than that in the active zone, and serving as an effective heat-retainer. The furnace being charged in this manner the electric current was turned on, and at the beginning registered 79 volts and 75 kw. After 2 hours, the register showed 203 volts and 200 kw., and after 9 1/2 hours showed 135 volts and 800 kw. The register at the end of 15 hours still showed 800 kw., while the volts had dropped to 70, as the result of decreased internal resistance, due to the formation of graphite. When cold the furnace was opened and 962 lb. of soft, unctuous and non-coalescing graphite were removed from the active zone."

Soft or unctuous graphite is supplied in admixture with grease under the name of "Gredag." "Deflocculated graphite"[3] is a variety of graphite that has been so finely divided by a special process that it will remain permanently suspended in oil or in water. It is supplied mixed with oil under the name "oildag," and mixed with water

[1] Soft Graphite, Electrochemical Industry, vol. iv, pp. 343 and 502.

[2] Soft Graphite. E. G. Acheson, U. S. patent 836,355, Electrochemical Industry, vol. iv, p. 502.

[3] E. G. Acheson, "Deflocculated Graphite." Trans. Am. Electrochem. Soc., xii, 1907, p. 20.

under the name "aquadag." These mixtures, after dilution with oil and water respectively form very effective lubricants.

Kryptol,[1] a material specially prepared for use as a resistor in electric heaters and furnaces, appears to consist of a mixture of graphite and amorphous carbon, in grains of nearly uniform size. This material can be given a higher or lower electrical conductivity by varying the proportion of graphite and amorphous carbon, and by changing the size of the grains of which it is formed.

CARBORUNDUM

Carbide of silicon SiC was discovered independently by three investigators, E. G. Acheson, A. and H. Cowles and H. Moissan. The brothers, E. H. and A. C. Cowles, appear to have discovered the compound in an electric furnace in 1885, but they did not know its composition and their work was interrupted. Moissan produced this carbide in 1891 but did not publish his work until later. E. G. Acheson, only shortly after Moissan's discovery, made the experiment of heating carbon and clay in an electric furnace, and obtained a mass of bright blue crystals, which he at first supposed to consist of carbon and alumina, hence the name of carborundum. Further experiments showed that these crystals of carborundum could be obtained by heating sand and carbon and that they were the carbide of silicon SiC. The discovery of this carbide by E. G. Acheson in 1891[2] was the first step leading to the considerable industries at Niagara Falls, with which he is now associated.

The formation of silicon carbide may be represented by the following equation:

$$\underset{60}{SiO_2} + \underset{36}{3C} = \underset{40}{SiC} + \underset{56}{2CO}.$$

This carbide is amorphous when it is first formed, but on being more strongly heated it crystallizes and is then known as carborundum.

Carborundum is produced by heating a mixture of coke, silicious sand, sawdust and salt in an electric furnace such as is shown in operation in Fig. 118, and diagrammatically in Fig. 8. The charge is made

[1] Kryptol, Electrochemical Industry, vol. ii, pp. 333 and 463, vol. iii, pp. 5, 127, and 157, and vol. iv, pp. 148, 210, 250, 296, and 344.

[2] E. G. Acheson, "Discovery and Invention." The Electric Journal, Pittsburgh, 1906.

approximately in the following proportions:—Coke 34.2 per cent., sand 54.2 per cent., sawdust 9.9 per cent., and salt 1.7 per cent.; the sand and the carbon in the charge being nearly in the proportion indicated by the equation. The sawdust contained in the charge has the effect of rendering it more porous and of allowing the gases to escape more freely, while the salt is found to facilitate the running of the furnace.

Later accounts show a larger proportion of salt and a smaller amount of sawdust in the charge. J. W. Richards,[1] writing in 1902, and describing a furnace of 750 kw., says, "The total contents of the furnace are about 1,000 lb. of carbon core, and the mixture reduced

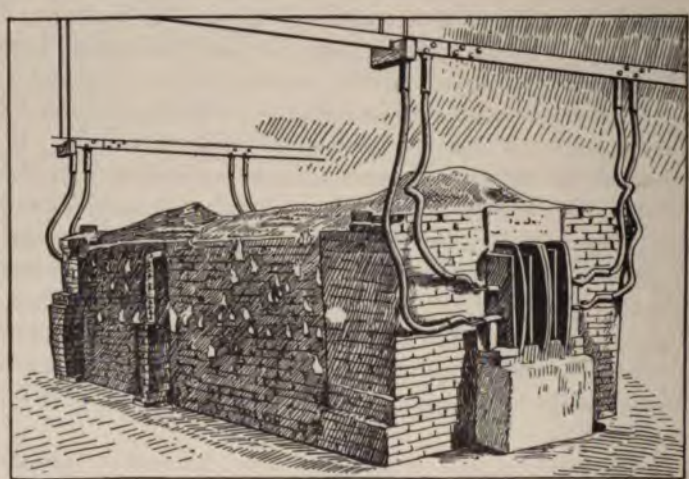

FIG. 118.—Carborundum furnace.

represents 3.5 tons of carbon mixed with 6 tons of silica sand and 1.5 tons of salt, producing in a 36-hour run between 3 and 4 tons of commercial carborundum, in crystals, outside of which is a quantity of light green amorphous carborundum, fully reduced, but uncrystallized, and outside of this the unchanged mixture." E. G. Acheson's United States patent No. 560,291, May 19, 1896,[2] for a carborundum furnace of 1,000 kw. specifies a mixture of "20 parts (by weight) of

[1] The Electrochemical Industries of Niagara Falls, J. W. Richards, Electrochemical Industry, vol. i, p. 50.

[2] E. G. Acheson, U. S. patent 560,291, Electrochemical Industry, vol. v, p. 70.

An earlier patent, 492,767, February 28, 1893, is abstracted in vol. v, p. 36.

finely divided coal or coke, 29 parts of sand, 5 parts of common salt, and 2 parts of sawdust."

The mixture of coke, sand, etc., is not a good conductor of electricity, and the heating must therefore be effected by means of a core of broken coke, marked *E* in Fig. 8, which extends between the two electrodes, *C* and *D*, and serves as a resistor, carrying the electric current and heating the surrounding charge. The coke for making up the charge is ground to a powder, but the coke for the resisting core is in small pieces about 1/4 or 3/8 in. in size, from which the dust has been removed. The core is circular in section and is built up by hand after the furnace has been half filled, a packing of fine carbon powder serves to make good electrical contact between the core and the carbon electrodes. The electrodes consist of a number of square rods of carbon or graphite, which are held by heavy bronze holders *F* and *G*. Electrical contact with the carbon rods being rendered more perfect by a series of copper strips, indicated by white lines in Fig. 8, which are laid between the rows of carbon rods and are connected to the bronze holders or directly to the cables from the bus-bars. The general construction of the furnace is similar to that of the graphite furnaces, the end walls and bottom of the furnace being permanent, while the side walls are loosely built, allowing the carbonaceous gases to escape and burn as shown in Fig. 118, and are taken down between the operations to allow of emptying and refilling the furnace. The electrical equipment is similar to that of the graphite furnaces, but there are more electrical units provided, as three 750-kw. furnaces and one 1.000-kw. furnace can be operated at once.

The carborundum furnace has been described by F. A. J. FitzGerald[1] who gives a scale drawing of a 750-kw. furnace. The furnace was 16.5 ft. long, 6 ft. wide, and 5.5 ft. high inside, and had a core of coke, 16 ft. long and 20 in. in diameter. In the patent just referred to a furnace of 1,000 kw. was stated to have a core 8 ft. long and 10 in. in diameter, composed of grains 3/16 in. in diameter, of coked bituminous coal.

At the end of the operation the carborundum is found in a cylindrical crystallized mass surrounding the core, and around the carborundum is a layer of uncrystallized carbide which has been called carborundum fire-sand. In the furnace figured by FitzGerald the carborundum cylinder is 50 in. in diameter. The layer of fire-

[1] The Carborundum Furnace, F. A. J. FitzGerald, Electrochemical Industry, vol. iv, 1906, p. 53.

sand is often 1 in. or 1.5 in. in thickness. The grains of coke composing the core have become partly graphitized. They can be used again, and their use will be better in general than that of fresh coke as the resistance of the core will be less variable. The temperature of the furnace is highest in the middle, that is just around the core, and the inner part of the carborundum may be heated above its dissociation temperature and be converted into graphite, the silicon being volatilized and driven into the cooler parts of the furnace. The accidental formation of graphite in this way led to its regular manufacture in the Acheson furnace. The temperature of the carborundum furnace has been measured by Messrs. Tucker and Lampen[1] who find the dissociation temperature of carborundum, and therefore the hottest part of the furnace to be 2,220° C. Mr. Saunders[2] has recently repeated these tests and practically confirms the results obtained by Tucker and Lampen, placing the formation

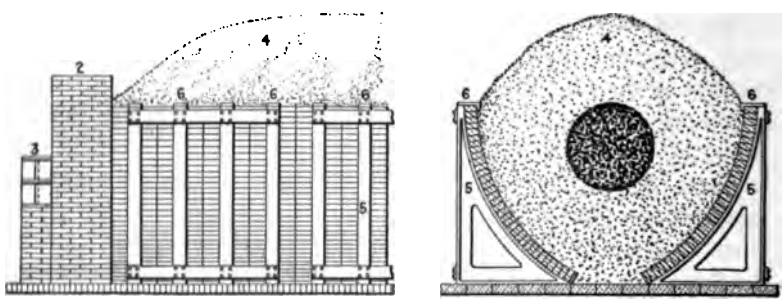

FIG. 119.—Improved carborundum furnace.

of amorphous silicon carbide at 1,600° C., that of carborundum at 1,840° C. and its decomposition into carbon and silicon at 2,240° C.

The carborundum furnace shown in Figs. 8 and 118 has been improved recently by Mr. Tone, in order to facilitate its operation. The temporary side-walls of the furnace, which had to be built up fresh for every charge, have been replaced by a series of iron frames lined with bricks as shown in Fig. 119.[3] These frames are portable and can be removed by an overhead crane at the end of one operation and reassembled on an empty furnace in a very short time. The

[1] S. A. Tucker and A. Lampen, "The Measurement of Temperature in the formation of Carborundum," Jour. Am. Chem. Soc., xxviii, 1906, p. 853.

[2] L. E. Saunders, "Temperature Measurements on the Silicon Carbide Furnace," Trans. Am. Electrochem. Soc., xxi, 1912, p. 438.

[3] F. J. Tone, U. S. patent 800,515, 1905.

furnace-hearth is also provided with tubes for water-cooling (not shown in the figure), as otherwise the brick-work was found to become so hot as to become an electric conductor and carry part of the current which should have been confined to the materials of the charge.

The electrical equipment of the Carborundum Company amounts to 7,000 h.p. The furnaces are of 1,000 to 2,000 h.p. each, and the electrical supply is arranged in a series of units of 1,000 or 2,000 h.p. Each electrical unit can be connected to any one of a series of five furnaces, one of which is in operation while the others are being cooled, discharged or loaded. The electrical power is received at a voltage of 2,200 with a frequency of 25 cycles, and supplies transformers of 1,600 kw. The secondary current from these transformers has a voltage of about 180 and this can be regulated within considerable limits, by cutting out some of the primary windings. This regulation (see Fig. 49) is effected by a system of oil switches operated electrically from a controller. The transformers are placed close to the furnaces they are to supply, but the voltage is controlled, by one operator, from a central room where the electric meters are placed.

The consumption of energy per pound of carborundum was given by J. W. Richards as 3.8 kw. hours. The output in 1905 was 5,596,000 lb. Its main use is as an abrasive, being used instead of emery; it is made into wheels, sticks, hones, etc., the masses of carborundum being crushed, washed and graded into powders of varying degrees of fineness. These powders are usually cemented together to form the carborundum articles by molding with kaolin and feldspar and firing in a kiln, but a method has been devised[1] for making solid blocks of carborundum by cementing the grains together with thin glue, and then heating in the electric furnace to the temperature of the formation of carborundum. The grains become firmly cemented together. The uses of carborundum and carborundum fire-sand as refractory materials have been referred to in Chapter IV. The Carborundum Company have a plant at Duesseldorf in Germany for the manufacture of carborundum for the European market.[2]

Moissanite.—This is a natural form of carborundum which was discovered by G. F. Kunz,[3] in the Cañon Diablo Meteorite.

[1] F. A. J. FitzGerald, U. S. patent 650,234, Electrochemical Industry, vol. v, p. 70.

[2] Electrochemical Industry, vol. iv, p. 348.

[3] G. F. Kunz, Trans. Am. Electrochem. Soc., xii, 1907, p. 45.

Silundum[1] is a compact form of carborundum formed by the conversion of carbon into silicon carbide by impregnation with silicon vapor. This is accomplished in a furnace like that used for the production of carborundum; the carbon articles to be converted into silundum being packed in a suitable charge. The charge may be composed of a mixture of silica and carborundum, according to the equation:

$$SiO_2 + 2SiC = 3Si + 2CO,$$

or more usually of a mixture of sand and coke according to the equation:

$$SiO_2 + 2C = Si + 2CO.$$

The furnace is provided with the usual resisting core of broken carbon, and the articles to be converted are separate from the core. The furnace is run in the usual manner to form silicon. This is in the form of vapor and penetrates the carbon articles, forming a compact semi-metallic product known as silundum. The carbon is converted into silundum beginning at the outside and continuing to a depth which depends on the length of the operation; so that there will frequently be a core of unchanged carbon within the sheath of silundum.

Silundum will probably be of value for electrical resistors, on account of its ability to withstand oxidation, when heated in air to temperatures as high as 1,200° C. Resisting grids have been made of rods of silundum fused together by means of silicon.

Siloxicon.—This term covers a series of compounds of silicon, carbon and oxygen, having the general formula Si_xC_xO, which are produced in the electric furnace by heating a mixture of carbon and silica, in which there is not enough carbon to form carbide of silicon with the whole of the silica. This material was patented by Dr. Acheson in 1902.[2] The proportions indicated in the patent are one part of powdered carbon to two parts of powdered silica. The mixture must not be heated to the temperature of formation of carborundum, because at that temperature siloxicon dissociates into carborundum, silicon and carbon monoxide. On account of the danger of over-heating, it is desirable to employ a furnace with a number of cores, moderately heated; this arrangement enabling a

[1] S. A. Tucker, Trans. Am. Electrochem. Soc., vol. xvi, 1909, p. 207.

[2] Refractory Material, E. G. Acheson, U. S. patent 722,793. Electrochemical Industry, vol. i, p. 287.

large volume of the charge to be heated to a nearly uniform temperature, and thus giving a better yield of the siloxicon. Such a furnace is shown diagrammatically in Fig. 120, the core consisting of a large number of rods of graphitized carbon connected together by being fitted into blocks of graphite. In the furnace shown the rods are arranged partly in series and partly in parallel, one-third of the entire current passing through each rod. The graphite blocks are shown supported on a layer of some refractory material on the

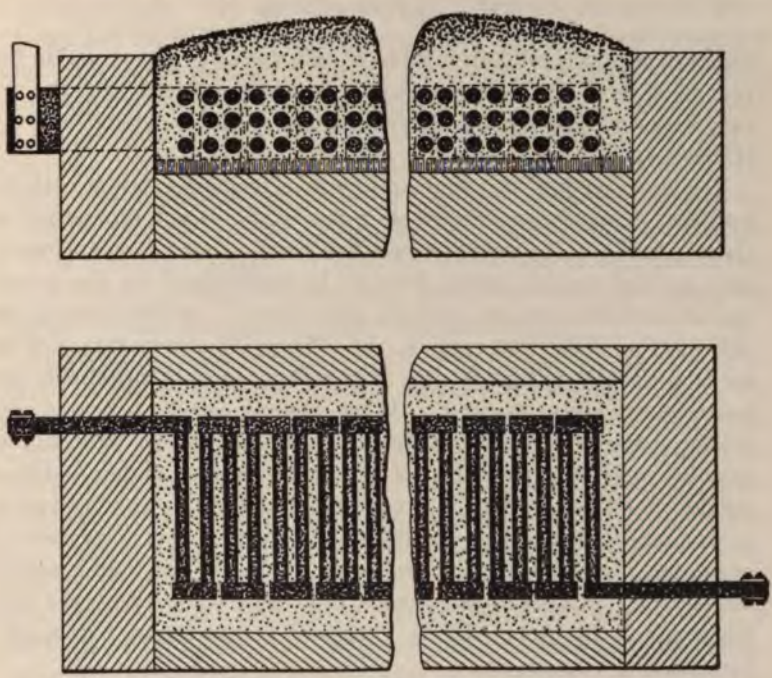

FIG. 120.—Multiple core furnace.

bottom of the furnace. Siloxicon, the most usual formula for which is Si_2C_2O, is a loose powdery gray-green amorphous material, and can readily be removed from the furnace after taking down the side walls, by raking it out from between the cores. Such a furnace might be employed for the manufacture of amorphous silicon carbide, but could not be used for the production of the crystallized carborundum, as the system of cores would be destroyed after each operation. Siloxicon forms a valuable refractory material, and its properties and uses have been described in Chapter IV.

CALCIUM CARBIDE

When lime is heated with carbon in the electric furnace to a high temperature (about 2,000° C.) the lime is reduced by the carbon to the metal calcium. This combines with additional carbon to form calcium carbide, which is fluid at the temperature of the furnace. The reaction may be expressed generally by the equation:

$$\underset{56}{CaO} + \underset{36}{3C} = \underset{64}{CaC_2} + \underset{28}{CO}.$$

The production of calcium carbide, in this way, was discovered in the year 1892 by T. L. Willson, whose name is associated with the development of the calcium-carbide industry, and independently by H. Moissan.[1]

The reaction between lime and carbon, forming calcium carbide, begins at temperatures as low as 1,500° C.,[2] but a temperature of about 1,800° C.,[3] is needed to melt the carbide, and a temperature at least as high as this would have to be maintained for the proper operation of the furnace. Moissan gives 3,000° C. as the temperature of formation of calcium carbide, but although the temperature of the arc is, no doubt, as high as this, the resulting carbide is probably not heated much above 2,000° C. When calcium carbide is heated considerably above its melting-point, it dissociates with the formation of calcium vapor and graphite. The calcium escapes and is oxidized outside the furnace, and the carbide remaining in the furnace is consequently of a lower quality on account of the admixture of graphite. Carbide which has been over-heated in this way, is said to be "burnt." Carbide furnaces are in general operated by the electric arc, and are of two kinds—"Ingot" furnaces and "Tapping" furnaces.

INGOT FURNACES

The Willson furnace, shown in Fig. 7, was an early form of ingot furnace. An iron box, *A*, mounted on a car, had a rammed carbon

[1] V. B. Lewes gives an account of the history of this discovery in his book on "Acetylene." T. L. Willson appears to be the original discoverer.

[2] M. de K. Thompson, "Preparation and Properties of Calcium Carbide," Trans. Am. Electrochem. Soc., xvi, p. 197.

C. A. Hansen, "Calcium Carbide," Electrochem. and Met. Ind., vol. vii, 1909, p. 427.

[3] A. Lampen, Jour. Am. Chem. Soc., vol. xxviii, 1906, p. 846.

bottom, *D*, which formed one electrode. The other electrode, *B C*, was movable, and was gradually raised as the mass of carbide accumulated in the furnace. The charge of coke or anthracite and lime was fed in so as to cover the arc, and the resulting carbon monoxide burned above the charge. A furnace of this type would take about 2,000 amperes at 75 volts; the position of the electrode being controlled automatically, so as to maintain a constant current. When a sufficient amount of carbide had been formed, the box was removed and allowed to cool. The contents were then dumped out and the loose charge and the half-formed carbide were separated from the compact and well-melted carbide. In such a furnace the loose charge forms the working lining, and in order to protect the iron box from the heat of the molten carbide a considerable amount of charge is utilized in this way, and is not converted into carbide, but can be used over again. In some cases, as much as 4 tons of material were needed for 1 ton of carbide. In this furnace the current has to pass through a mass of molten carbide (to reach the bottom electrode), and as this accumulates and solidifies, electrical energy is wasted in causing the current to pass through the partly solidified mass.

Improved Willson Furnace.—A more recent form is shown in Fig. 121. In this furnace two or more movable electrodes are used, the current entering through one and leaving through the other, and forming an arc between each electrode and the molten carbide. In this way the current has not to pass through any considerable accumulation of carbide. The furnace consists of a sheet-iron box, about 6 ft. high, stiffened with tee-iron and standing on a small iron truck. Two electrodes are used, each consisting of a number of round graphite rods threaded and screwed into a water-cooled iron holder, which is shown in detail in Fig. 39. The cables that bring the current are connected to the upper end of this holder, so as to be removed from the heat of the furnace. The rods connecting the upper and lower ends of the holder are iron pipes which carry the cooling water. The two holders are connected together mechanically at their upper ends, but are insulated from each other by pieces of vulcanized fiber, and the whole is lifted by a chain connected to an electric motor which is operated automatically so as to maintain a constant electric current through the furnace.

The charge consists of burnt lime, and coke or anthracite. These are crushed to 1/8 or 3/16 in. and are then mixed and supplied to the furnace from two bins. The charge passes down inclined shoots which are provided with gates to regulate the supply to the furnace.

The charge in the furnace is kept about two feet above the level of the arc, and occasionally requires to be poked to cause it to settle, holes being left in the front of the iron box through which the charge can be poked when necessary to break up any scaffolds or obstructions. The gases are led away through a flue from the upper part of the furnace.

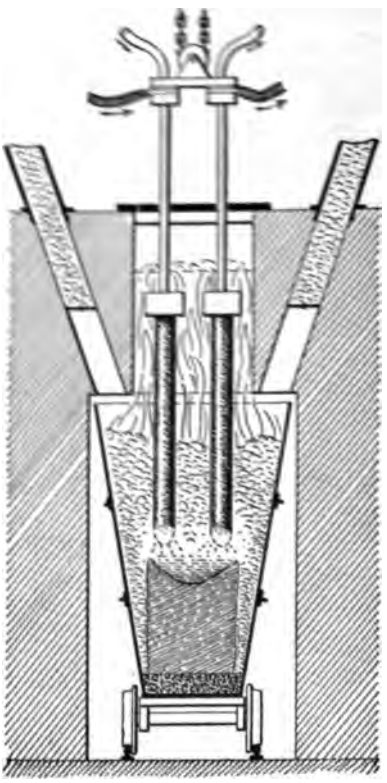

FIG. 121.—Willson carbide furnace.

The power used for one furnace is about 3,500 amperes at 75 volts, or 300 h.p. A charge of lime and coke weighing 1,400 lb. is smelted in about 13 hours, yielding 800 lb. of marketable carbide. The box is then taken out of its place, and allowed to cool before dumping the contents: a fresh box being substituted. The electrodes, when made of graphite, last 130 hours; amorphous electrodes last 100 hours and cost less, but are more difficult to thread.

The Bullier ingot furnace, Fig. 122, is built of brickwork, with a drop-bottom which opens to discharge the ingot of carbide. In the furnace shown in the figure, there is only one movable electrode, as in the early Willson furnace; the drop-bottom forming the other electrode. The furnace could, however, be operated with two electrodes as in Fig. 121; no connection being made to the bottom. After an ingot has been formed in this furnace, it must be left for

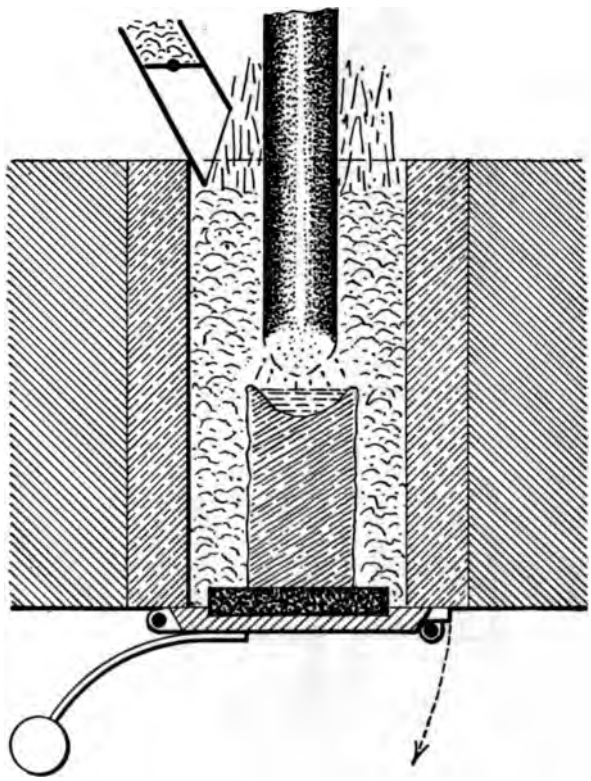

FIG. 122.—Bullier carbide furnace.

some time to cool before it can be dumped; but on the other hand, the heat of the molten ingot serves to convert some of the surrounding charge into carbide, and the heat that passes into the brickwork is not all lost, but is restored, in part, to the charge in the next operation.

In the Willson and Bullier furnaces the electrodes are gradually raised as the ingot of carbide is built up; but in some other furnaces

the upper part from [illegible]. The furnace is provided with a spout and tapping-hole which is closed during the operation and opened periodically to draw off the molten carbide. The heat is produced in this, as in most other carbide furnaces, by an arc between the electrode, E, and the molten carbide.

A furnace of the size indicated will take from 10,000 to 30,000 amperes at about 50 volts which is equivalent to about 1,200 kw.

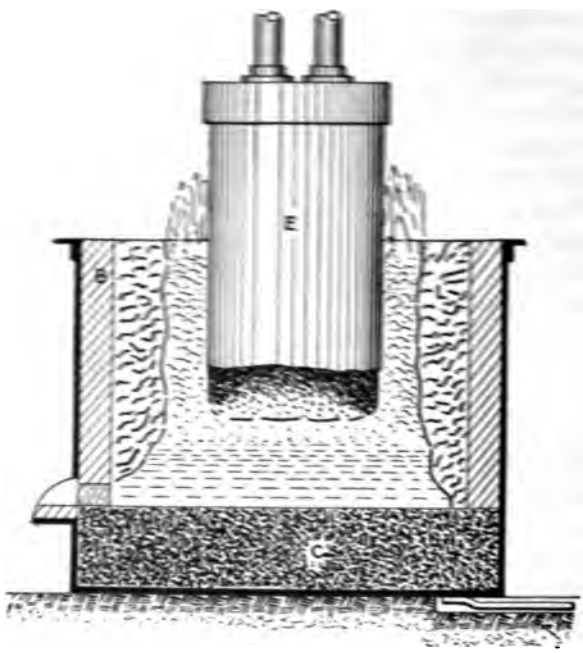

FIG. 124.—Tapping carbide furnace.

Large tapping furnaces operating with three-phase current and having three electrodes (see Fig. 113) will use as much as 2,000–3,000 h.p.[1]

The Helfenstein furnace[2] for calcium carbide is intended for three-phase current. It consists of three smelting chambers, built close

[1] R. A. Witherspoon, "Manufacture of Calcium Carbide," Jour. Soc. Chem. Ind., xxxii, 1913, p. 113. The author is indebted to Mr. Witherspoon for particulars of the tapping furnace, Fig. 124, and for some other information contained in this section.

[2] R. Taussig, Faraday Soc., v, 1910, p. 254; Soc. Chem. Ind., xxix, 1910, p. 435; Met. and Chem. Eng., x, 1912, p. 686.

together, and provided with a rammed carbon electrode, extending under all the chambers. Each chamber has one movable electrode which is connected to one lead of the three-phase supply; the common electrode, which forms the bottom of the three furnaces, serving as the neutral point of the system. Provision is made for sealing the top of the furnace so that the carbon monoxide is obliged to escape through flues in the brickwork, and can be employed for burning limestone or preheating the charge.

Comparing tapping and ingot furnaces, it will be obvious that additional energy is needed in the former in order to keep the carbide molten. In practice, this additional energy is less than might be supposed, because in such furnaces the carbide is often rendered more easily fusible by the presence of an excess of lime in the charge. It follows, therefore, that the carbide from running-furnaces is frequently of a lower grade than would be produced in ingot-furnaces.

In regard to the size of these furnaces, it has been found that 200–300 h.p. is a suitable size for an ingot furnace. The tapping furnace can be made decidedly larger (up to 2,000 to 3,000 h.p.), being limited merely by the size of the electrodes, which should not carry a current of more than 12–15 amperes per square inch; larger currents tending to overheat and "burn" the carbide. In regard to the nature of the electrodes, it has been found desirable to use graphite electrodes in ingot furnaces, but in the tapping furnace, owing to the excess of lime in the charge, there is a greater consumption of electrode material, and it is therefore necessary to use the cheaper carbon electrode.

In the production of calcium carbide, much carbon monoxide is liberated. As this gas liberates a large amount of heat when burnt, it should be utilized for burning the limestone, or preheating the charge. Owing, however, to the difficulty of suitably enclosing the furnace very little use has so far been made of the carbon monoxide which is generally allowed to burn above the charge in the furnace.

RESISTANCE FURNACES

Calcium carbide is generally formed in arc-furnaces, but it has been stated that in France many carbide furnaces are operated on the resistance principle, that is to say, without the formation of an arc. W. Borchers in his "Electric Furnaces" shows a furnace by Gin and Leleux, having one movable electrode which is lowered until it

touches the molten carbide, so that no arc can be produced, but the heat would be generated by the passage of the electric current through the molten carbide. On the other hand, it has been pointed out[1] that the electrodes should not touch the molten carbide, and that an arc must, therefore, always be present in furnaces of this class. It seems probable that when "Resistance Furnaces" are referred to, the meaning is that the furnace is operated with a low voltage (about 30 volts), the electrodes being only slightly separated from the molten carbide. In this connection it may be pointed out that in a furnace for smelting iron-ores, where the charge is moderately fusible, the current flows from the electrodes through the melting charge to the molten slag and metal without the formation of an arc, but that in a carbide furnace, owing to the refractory character of the charge, any

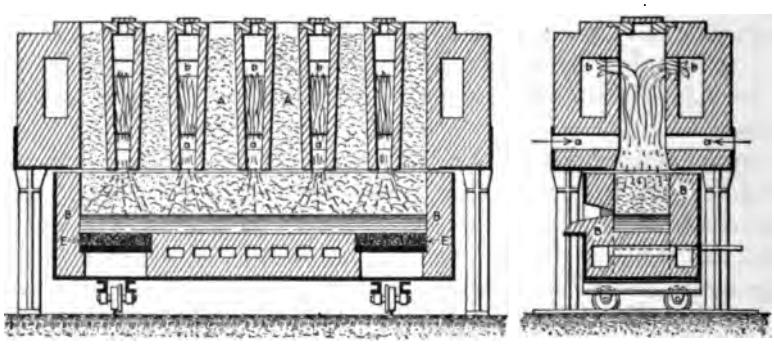

FIG. 125.—Resistance carbide furnace.

separation between the electrodes and the molten product entails the formation of an arc. There are, however, certain furnaces which undoubtedly operate on the resistance principle.

Tests on the relative efficiency of arc and resistance furnaces have been made in the laboratory by Prof. Tucker,[2] using, for a resistance furnace, a carbon rod heated by the electric current, around which the charge was placed. This furnace was found to be decidedly more economical than a small arc-furnace, but the conditions of the tests did not permit of a fair comparison between arc-furnaces and resistance furnaces in general. In operating the resistance furnace the

[1] W. Conrad, "Electric Furnaces for the Manufacture of Calcium Carbide and Ferro-silicon." Electrochem. and Met. Ind., vi, 1908, p. 397.

[2] S. A. Tucker and others, "Relative Efficiency of the Arc and Resistance Furnace for the Manufacture of Calcium Carbide," Trans. Am. Electrochem. Soc., xv, 1909, p. 411.

carbon rod soon burned away, causing the current to pass through the resulting carbide.

The furnace shown in Fig. 125 possesses many points of interest. It consists of a furnace-hearth, *B B*, mounted on wheels, and having a carbon electrode, *E*, at each end; these electrodes forming part of the bottom of the furnace. The current passes between these electrodes through the molten carbide, so that in this case the heat is developed entirely in the carbide. The portion of the hearth lying between the electrodes is composed of refractory material, and is provided with passages for air-cooling. This is necessary to prevent the melting of this part of the hearth. The upper part of the furnace consists of a shaft divided into a number of sections, *A A*, by hollow walls. The gases produced from the reaction escape into the hollow spaces in the walls, and meeting with a supply of air, are burnt in these flues and heat the furnace before they escape.

The Production of Calcium Carbide.—The materials for the production of calcium carbide are lime, and some form of carbon such as coke, anthracite or charcoal. It is essential that they should be as pure as possible, and in particular, that the lime should be thoroughly burnt and quite free from moisture. It should contain as little magnesia and phosphorus as possible, especially when it is to be used for the production of acetylene. Magnesia interferes with the formation of calcium carbide, as it does not itself form a carbide, and phosphorus enters the carbide and finally passes into the acetylene gas, as phosphoretted hydrogen. When this is burnt, a haze is produced which is very objectionable. The coke or other fuel must also be as free as possible from ash-forming ingredients.

The proportion of lime and fuel employed is about that required by the equation, allowing of course for the presence of any impurities. The charge used in the ingot furnace contains, however, a slight excess of carbon, and that in the running furnace, a small excess of lime. The lime is roughly crushed to pieces of 1 in. in size and the coal is crushed to pea size. Finer crushing, which was in use at one time, leads to the formation of a large amount of dust, and has been found to be unnecessary.

It is often stated that 1 ton of carbide requires 1 h.p. year for its production, but the output from a modern furnace is from 10 to 13 lb. of commercial carbide per kilowatt day, which is nearly 2 tons per horse-power year, and in some recent furnaces as much as 1.5 tons of carbide have been produced for every horse-power year supplied to the plant. The cost of making carbide in Canada

CHAPTER XII

THE ELECTRIC SMELTING OF ZINC AND OTHER METALS

ELECTROTHERMIC PRODUCTION OF ZINC

Although zinc is one of the common metals, and has long been produced in furnaces fired by coal or gas, its volatility and the ease with which it becomes oxidized present serious difficulties in the treatment of its ores, and many attempts have been made to overcome these difficulties by smelting ores of zinc in the electric furnace.

In the usual process of zinc smelting, the ores are first roasted, to remove sulphur in the case of sulphide ores or carbonic acid in the case of carbonate ores, and the resulting oxide of zinc is mixed with about one-half its weight of coal and heated in retorts or muffles made of fire-clay. In order to complete the reduction of the oxide to the metallic state it must be heated to a temperature above the boiling-point of the zinc, which is consequently given off as vapor, passing in that form out of the retort, and is condensed to the liquid metal in a condenser, from which it can be removed and poured into molds.

The residue is then removed from the retort and the operation repeated. The retorts are heated externally by coal or gas firing, and as the ore must be heated to about 1,200° C., or 2,200° F., the retorts cannot usually be made very large and frequently only hold about 100 lb. of the ore mixture; from which it will be seen that the cost of labor in zinc smelting is likely to be high. The utilization of heat in these furnaces is also very poor on account of its slow transmission through the walls of the retorts; the heat efficiency of such a furnace being given by Prof. Richards[1] as under 7 per cent. At the high temperature of zinc distillation the retorts only last about a month, and their renewal forms a considerable item of expense. Other difficulties are met in the condensation of the zinc vapor, as this does not all collect in the liquid state, but in part as a powder, which cannot be melted together, while a part of the vapor escapes altogether.

[1] J. W. Richards' Metallurgical Calculations, Part I, p. 80.

Most of the difficulties that have been referred to are caused by the necessity of heating the ore in a number of small retorts, heated externally, instead of in a large furnace in which the heat could be produced in close contact with the ore. Attempts have been made to reduce the ore in some form of blast-furnace, but the zinc was too easily oxidized by the furnace gases, and it was not possible to condense the zinc to the liquid state. Zinc oxide suitable for making paint is, however, produced in small blast-furnaces, and is filtered out of the furnace-gases by passing them through woolen bags.

In the electric furnace, heat can be produced without the necessity of blowing air into the charge: the atmosphere in the furnace can be made thoroughly reducing, so that no zinc will be oxidized, and the gases leaving the furnace are no more than leave the zinc retort in the usual process, so that the condensation of the zinc should be satisfactory. The production of heat electrically, in the midst of the ore mixture, enables the furnace to be made of any convenient size, and

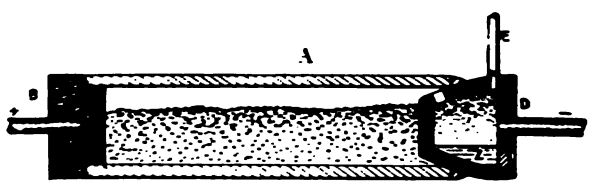

FIG. 126.—Cowles zinc furnace.

thus greatly reduces the expense of labor, while, as the heat has not to be transmitted through the furnace walls, these will be far more permanent and a great source of expense will thus be avoided.

Although the advantages that could be gained by smelting zinc-ores electrically were very obvious, the practical application of electrical heating to this process has not been easy. The first electrical furnace for distilling zinc-ores was patented by the Cowles brothers in 1885, and consisted, Fig. 126, of a fire-clay tube, *A*, closed at one end by a carbon plug, *B*, and at the other end by a carbon crucible, *C*, and lid, *D*. The charge of roasted ore and coal was contained in the tube, and electrical connections were made to the carbon plate and crucible so that an electric current flowed through and heated the ore in the tube. The tube was surrounded with some suitable material to reduce the loss of heat. The vaporized zinc and other gaseous products of the process escaped through a hole into the crucible, where the zinc condensed to a liquid at *Z*, while the remaining gases passed away by the pipe *E*. The furnace was practically an

electrically heated zinc retort, and, as shown in the figure, the process was intended to be intermittent in action, one charge being exhausted and then discharged before another could be introduced. Provision could, however, have been made for the continuous charging and discharging of such a furnace, but the process was never completed.

A furnace patented in 1904 by W. McA. Johnson,[1] of the Lanyon Zinc Co., Fig. 127, is practically the same as the Cowles' furnace, but it is designed on a larger scale, and care has been taken to prevent the overheating of the walls of the furnace. It consists of an arched chamber, *A*, with end walls, *B* and *C*, and a flue, *D*, through which the zinc and other gaseous products of the operation can pass. The whole furnace is supported upon I-beams, thus enabling the air to pass underneath and prevent overheating. The furnace is constructed of fire-clay bricks, but as additional protection, a layer, *M*,

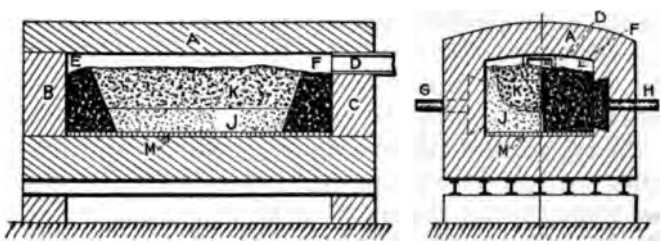

FIG. 127.—Johnson zinc furnace.

of refractory material, such as silica, high-grade fire clay or bauxite, is placed on the hearth. The ore mixture consists of roasted ore mixed with enough coke to reduce the zinc and to carry the electric current. Some of the ore to be treated contains considerable amounts of iron, lime, lead and copper, and would be likely to flux the walls of the furnace. This low-grade ore is, therefore, placed in the middle and upper part of the furnace at *K*, being separated from the floor and walls by a layer of purer ore, *J*. All the ore is mixed with enough coke to reduce the zinc it contains, but in order to prevent the overheating of the walls care is taken that the mixture *K* shall be a better electrical conductor than the mixture *J*, so that the current will pass mainly through the middle of the furnace. *E* and *F* are heaps of coke serving as electrodes, the current flowing between *E* and *F* through the ore

[1] W. McA. Johnson, Electric Zinc Furnace, U. S. patent 814,050, filed May 24, 1904, Electrochemical Industry, vol. iv, p. 152.

mixture. Electrical contact is made with the coke by means of graphite or carbon blocks and rods passing through the front and back of the furnace. *G* and *H* are connected to one cable bringing the current, and make contact with the coke *F*, while two similar terminals connect the other cable to the coke *E*. This furnace is the same in principle as an ordinary zinc retort, but the production of the necessary heat within the retort, which can only be effected electrically, enables the dimensions of the retort to be increased to any desirable extent, and the walls, instead of being thin, as was necessary when the heat had to pass through them, can be made of any suitable thickness. The furnace is necessarily intermittent in action, and would be allowed to cool somewhat to allow of the spent ore being removed through some convenient opening and a fresh charge being carefully arranged in the furnace before it could again be heated. The zinc vapors passing through the flue *D* would enter a system of condensing chambers, the first section of which would be kept at a temperature above the melting-point of zinc in order to obtain that metal in the molten condition.

The electric zinc furnace of C. P. G. de Laval, Fig. 128, was patented in 1903, and has this advantage over the Johnson furnace, that the ore mixture can be continually charged into the furnace, and that the residues are fused and can be tapped out at intervals without interrupting the operation of the furnace. The heating is effected by an arc which is maintained between two carbon electrodes, one of which is shown at *E*. The ore mixture is introduced continuously by means of a charging shaft, *A*, or by a hopper and screw feed through the wall, *F*,[1] and forms a heap, *C*, in the furnace, where it is gradually heated, the zinc reduced to the metallic state and distilled, and the residues finally melted by the heat of the arc. The vaporized zinc and the gases produced by the action of the coal on the ore, escape by a passage, *D*, to condensing chambers. The heaping up of the ore in the furnace serves to protect the charging aperture and the gradual heating of the ore is probably an important feature of the process, as it allows the zinc oxide to be reduced to the metallic state, and the resulting zinc to escape from the ore before fusion sets in, as it is difficult to liberate the metal from its ore when in a pasty or fused state. The utilization of the electrical heat in this furnace is not perfect, but the operation is simple and therefore not likely to give trouble. The process has been in

[1] C. G. P. De Laval, U. S. patent 768,054, Electrochemical Industry, vol. ii, p. 423.

commercial use for several years in Europe. In the year 1906, 3,000 h.p. was employed at Trollhättan (Sweden) in the reduction of ore and zinc ashes (galvanizers' waste), 4,000 h.p. at Sarpsborg (Norway) in the reduction of zinc ashes, and 1,800 h.p. at Hallstahammar in the smelting of ore.[1]

De Laval, in common with all others who have smelted zinc ores electrically, found that the zinc did not condense satisfactorily to the molten state, but remained largely in the form of a powder which could not be melted together. This difficulty was most pronounced in the smelting of ores, and for some years the process was largely confined to the distillation of zinc dross and other metallic

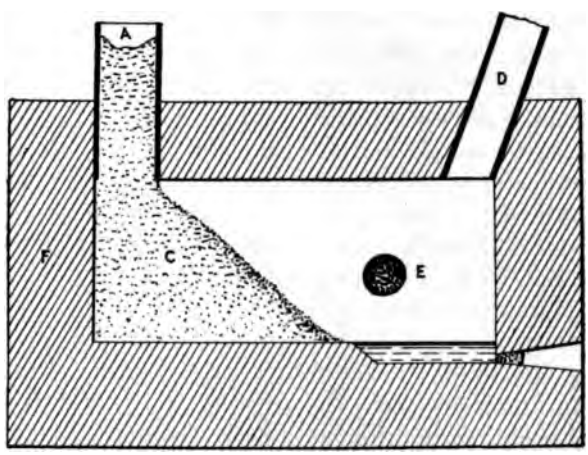

FIG. 128.—Laval zinc furnace.

products. The works at Trollhättan and Sarpsborg were studied by F. W. Harbord in 1911, and his report,[2] from which the following particulars are taken, shows that some progress has been made in the electrothermic smelting of zinc ores.

At the Trollhättan works the arc-furnace, Fig. 128, has been replaced by a "resistance" furnace, similar in principle to the Salgues furnace, Fig. 129; but some of the arc-furnaces were still in operation at the Sarpsborg works. The arc-furnace gives as good results as the resistance furnace, but consumes 70 per cent. more

[1] Report of the Commission to investigate the zinc resources of British Columbia and the conditions affecting their exploitation, Ottawa, 1906.

[2] Zinc Smelting at Trollhättan, Eng. and Min. Journal, Feb. 10, 1912, p. 314.

energy for an equal output. This difference is easily explained by the inefficient transfer of heat from the arc to the heap of ore.

The "resistance" furnaces have two electrodes as in Fig. 129, the lower one being a carbon block bedded in the bottom of the furnace, and the upper, movable electrode being a vertical carbon rod weighing 1,500 lb., having a cross-section of 336 sq. in., and a length of 10 ft.

Each furnace uses 350 electrical horse-power, which is supplied at about 100 volts; corresponding to a current of about 2,600 amperes, or 8 amperes for each square inch of electrode-section. With 100 volts it is quite likely that an arc may be formed between the electrodes and the slag, but any arc will be surrounded by the charge, and the heat will be utilized far more perfectly than in the original Laval furnace. The furnace holds about 3 tons of charge and smelts 2.8 metric tons of ore per 24 hours.

The smelting process is carried out in two stages; in the first, the ore is smelted with anthracite or coke and suitable fluxes, yielding some molten zinc and a large amount of "blue powder" and oxide. The powder contains about 56 per cent. of zinc and 20 per cent. of lead. It is recharged in another furnace with an admixture of ore and flux, and yields a larger proportion of molten zinc than was obtained from the ore furnace.

In Mr. Harbord's test, three furnaces were smelting an ore charge of 300 kg. Broken Hill slime (roasted), 10 kg. calamine, and 75 kg. of coke-dust; four furnaces were retreating the powder (from all the furnaces), using 100 kg. Broken Hill slime (roasted), 200 kg. powder, 25 kg. coke-dust and 5 kg. lime. The relative yield of zinc and blue powder from the ore furnaces and the powder furnaces is not stated, but from the figures quoted, it will be seen that on the average all the zinc obtained in the molten state has been smelted twice before it reaches that condition. The whole consumption of electrical energy and of electrodes, both for the ore smelting and the redistillation of the blue powder, amounted to 2,078 kw.-hours and 31.5 kg. of electrodes per metric ton of ore smelted.

Although the test was on a considerable scale, lasting 27 1/2 days, and treating 537 tons of ore, the recovery of metals was low, being 73 per cent. of the zinc, 79 per cent. of the lead, and 50 per cent. of the silver in the ore. Part of the loss was caused by the metals soaking into the brickwork of the furnace, and part as fume which was not completely recovered. The Broken Hill slime contained about 34 per cent. of zinc, 24 per cent. of lead, and 30 oz. of silver per ton.

The ore is charged through the roof of these furnaces, but in a later type, a continuous side-feed has been introduced, and is expected to give better results. A mechanical stirrer has also been used for separating the molten zinc from the powder.

M. A. Salgues[1] wrote, in the year 1903, an account of the electrometallurgy of zinc, and figured two or three furnaces, one of which, intended for use with 100 kilowatts, is illustrated in Fig. 129. It consists of a chamber, built in two parts, *A* and *B*, to facilitate clean-

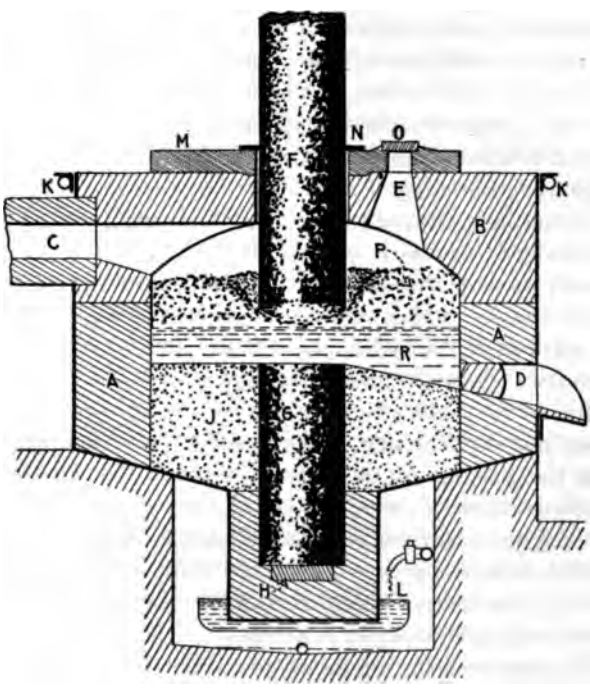

FIG. 129.—Salgues zinc furnace.

ing and repairing, an off-take, *C*, for the passage of the zinc and other gases, a tap-hole, *D*, and two charging and poking holes, one of which is shown at *E*. Heat is produced in the charge of ore by the passage of an electric current between the carbon electrodes, *F* and *G*; *F* being movable and supported by a suitable electrode holder, while *G* is set in the base of the furnace, and electrical contact is made with it by the bar of metal, *H*. The furnace is built of fire-bricks inside an iron jacket which is cooled by sprinklers shown at *K*, the lower car-

[1] Salgues, Bull. Soc. Ing., civ, 1903, p. 174.

bon holder having a special water-cooling device, shown at *L*. The hearth of the furnace is lined with sand, *J*, as is common in many smelting furnaces.

Salgues draws special attention to the means by which he keeps the furnace air-tight around the upper electrode and at the poking and charging holes. For this purpose he provides a heavy cast-iron plate, *M*, in which are holes for the electrode and for charging, the latter being closed by lids, *O*. The gases in the furnace, being under a slight pressure, rush out through any opening, such as the crack around the electrode, but a ring of asbestos, *N*, delays the gases a little, and the zinc vapor will then condense on the iron plate (which is cooled by a jet of water), and immediately closes the crack. In the same way, after charging or poking, the crack between the lid, *O*, and its seat is immediately sealed by the zinc, which condenses there.

The charge, consisting of roasted ore and the necessary carbon for its reduction, being introduced at *E*, from time to time, lies around the electrode, *F*, and as it becomes heated the zinc is reduced and volatilized, passing through *C* to condensing chambers; while the residue of the ore, which would need to be fusible, collects in the molten state at *R*, and is tapped out at intervals. This furnace is continuous in operation, and incidentally allows of the smelting of associated metals, such as lead, which will collect in the furnace and be tapped out with the slag. The heat may be produced in this furnace by the passage of the current through the molten slag, *R*, but if the electrode, *F*, were raised higher an arc would be produced. Salgues experimented at Champagne (Ariège), France, with a modified carbide furnace of 100 kilowatts, and using ores carrying 40 to 45 per cent. of zinc, fed cold into the furnace, he obtained a yield of 5 kg. of zinc per kilowatt-day.

It is in the smelting of mixed ores containing both zinc and lead, usually associated with silver, that the greatest advantage of electrical smelting may be expected. Such ores are very difficult to treat by ordinary furnace methods, because, if smelted as a lead ore in the blast-furnace, the zinc makes infusible slags and chokes up the furnace with deposits of fume, and none of the zinc is recovered. If treated as a zinc ore, the lead makes the ore fusible so that it corrodes the retorts, beside yielding an impure zinc containing some lead. When treated as a zinc ore, the lead and silver can be recovered by smelting the residues from the zinc retorts.

The Broken Hill ores are notable examples of a mixed sulphide of lead and zinc which cannot be separated at all completely by

mechanical means and must be treated as a whole by smelting or chemical methods. It occurred to the writer, about the year 1900, that such ores could be smelted electrically so as to recover at one operation the zinc, lead and silver from the ore; the zinc being distilled and condensed, while the lead carrying the silver from the ore would collect in the molten condition as in ordinary blast-furnace practice. Numerous experiments on a laboratory scale showed that this could be accomplished, and that the extraction of the lead was particularly good, only traces of that metal remaining in the slag.

The furnace in which some of these experiments were made is shown in Fig. 130.[1] It consisted of a rectangular chamber, *AB*, in which the ore was smelted, a charging shaft, *C*, for introducing the ore, and chambers, *F* to *K*, for condensing and collecting the zinc. The electric current was introduced by means of the carbon electrodes, *D* and *E*, which dipped into the molten slag in the furnace. In starting, a quantity of slag was melted and poured into the furnace which had previously been heated. The electrodes were then introduced, and the current switched on. The mixture of roasted ore, carbon and fluxes was poured into the shaft, *C*, which was kept nearly full during the operation of the furnace. The furnace was essentially a resistance furnace, the heating being accomplished by the passage of the current through the molten slag, and the furnace was made long and narrow in order that the electrical resistance might not be too low. Occasionally, however, the electrodes would become too short to reach the slag, and then an arc was formed. The products of the operation were lead, which collected at *L*, and was tapped out by the spout, *R*, slag which is shown at *S*, and was tapped out by the spout, *T*, and zinc vapor and other gases which left the furnace by the openings *FF*. The condensing system consisted of the chamber, *F*, in which a small amount of molten zinc collected, and an extensive system of iron pipes, *GH*, and *JK*, in which the greater part of the zinc collected in the form of zinc powder. The gases escaping with the zinc vapor were mostly carbon monoxide which burned at the end of the condensing system.

The cost of smelting sulphide ores of zinc, by the usual process, is materially increased by the necessity of a very complete roasting operation before the distillation of the zinc. Any sulphur left in the

[1] This furnace was devised by the author and Mr. L. B. Reynold , who did most of the experimental work. They have obtained the following patents on the electrical smelting of lead-zinc ores:—Canadian 102,311, Australian 1,681, German 183,470, Mexican 4,710.

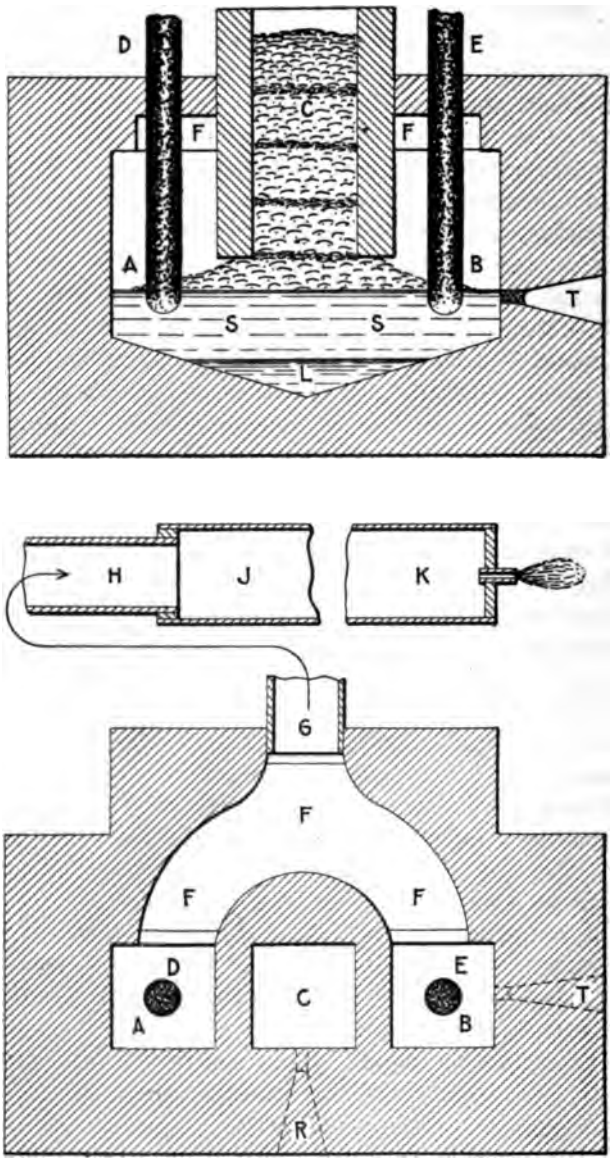

FIG. 130.—Experimental zinc furnace.

ore holds, as a rule, about twice its weight of zinc in the residues, and it is, therefore, the practice to leave no more than about 1 per cent. of sulphur in the roasted ore. So complete a removal of sulphur involves a prolonged roasting at a very high temperature, thus largely increasing the cost as well as the loss by volatilization of the lead and silver in the ore. Some inventors have tried to avoid this by smelting the ore, unroasted, in the electric furnace, with the addition of some reagent for absorbing the sulphur; iron, iron-ore, alkaline salts and lime being suitable for this purpose.

F. T. Snyder patented[1] a process for obtaining zinc from a sulphide ore of this metal without roasting. The ore is mixed with carbon and fluxes (iron and lime), and smelted upon a bath of molten slag in an electric furnace from which the air is excluded. The inventor claims that the carbon reacts with the sulphur of the ore and forms carbon bisulphide, which is volatilized, liberating the zinc. It is not stated whether the iron and lime used as fluxes played any part in absorbing the sulphur and liberating the zinc. Direct current is used, and it is stated that some electrolytic effect is produced; the zinc being liberated at one electrode and the carbon bisulphide at the other electrode. In one experiment, ore containing 20 per cent. zinc, 20 per cent. iron, 5 per cent. lead, 35 per cent. sulphur, and 20 per cent. of silica and alumina was mixed with iron and lime (and carbon) and fed into an electric furnace provided with carbon electrodes, between which scrap lead had been placed for starting the furnace. A direct current of 1,500 to 1,800 amperes at 7 to 15 volts was employed, heating the furnace to about 1,200° C. The ore melted and was reduced, zinc being liberated in the form of vapor near one electrode, while carbon bisulphide was formed near the other electrode. It is claimed that at least 94 per cent. of the zinc in the charge can be recovered by this process.

Mr. Snyder has experimented with induction furnaces for smelting zinc and other ores. The furnace represented in Fig. 131[2] being intended for ores in general, while a zinc-smelting furnace[3] would be provided with chambers for condensing the zinc. The furnace shown in Fig. 131, which could be used for smelting lead ores, has a

[1] F. T. Snyder, U. S. patent 814,810, filed June 23, 1905, Electrochemical Industry, vol. iv, p. 152.

[2] Induction furnace, F. T. Snyder, U. S. patent 825,359. Application filed July 15, 1904. See Electrochemical Industry, vol. iv, p. 319.

[3] Induction Furnace for Zinc, F. T. Snyder, U. S. patent 859,134. See Electrochemical Industry, vol. v, p. 323.

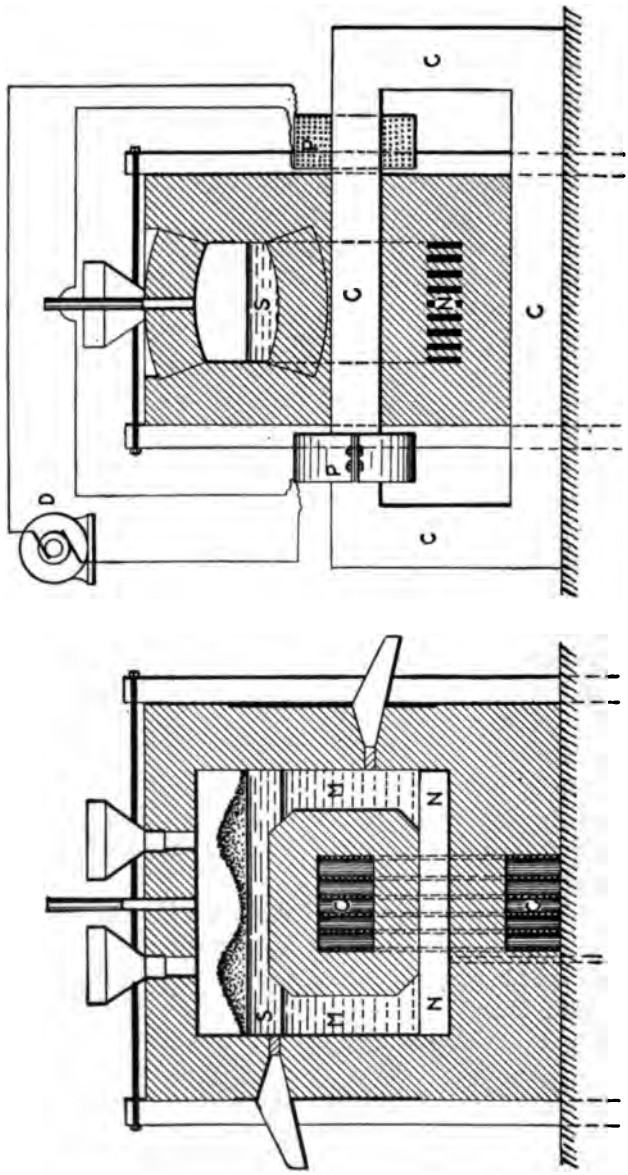

FIG. 131.—Snyder induction furnace.

laminated iron core, *CC*, a pair of primary coils, *PP*, and a secondary circuit made up of the molten slag, *S*, the molten metal, *MM*, and bars, *N*, of copper or some other metal which should not be attacked by the molten metal, *M*. The alternating current in *PP*, supplied by the generator, *D*, causes a much larger low-voltage current to flow around the secondary circuit, *N M S M N*, composed of the copper bars, *N*, the molten metal, *M*, and the molten slag, *S*. As the slag has a higher electrical resistance than the other parts of this circuit, the greater part of the heat will be developed in it, and the ore introduced through the hoppers will be heated, reduced and melted by contact with the superheated slag. The iron core,

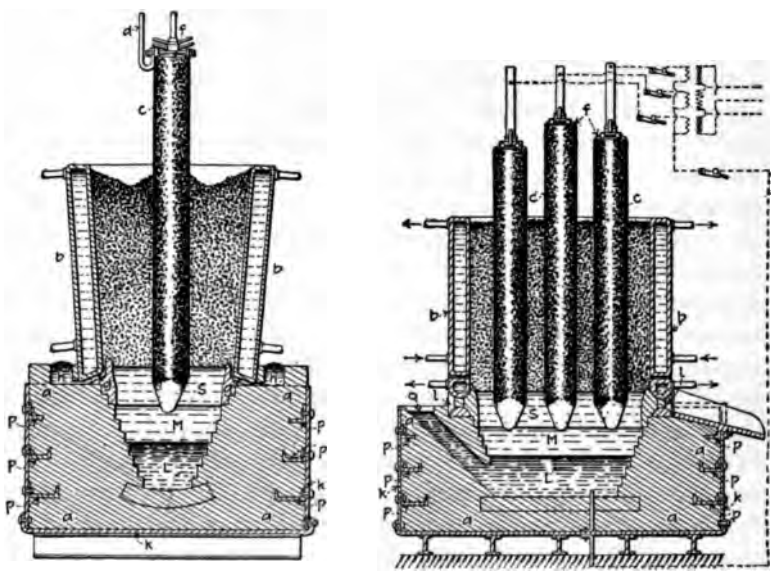

FIG. 132.—Snyder furnace for obtaining liquid zinc.

CC, passes through the middle of the furnace, and is therefore provided with water-cooling devices, not shown in the drawing, to avoid overheating.

Another zinc furnace invented by Mr. Snyder[1] is shown in Fig. 132. It is designed for the treatment of lead-zinc ores, with the special intention of obtaining the resulting zinc in a coherent liquid state, instead of in the form of a powder. The furnace is constructed on the lines of a lead blast-furnace, having a water-jacketed smelting

[1] Drawing and description sent to the author by Mr. Snyder. Compare F. T. Snyder, U. S. patent 859,133. See Electrochemical Industry, vol. v, p. 323.

shaft, *bb*, and a crucible *aa*, holding the molten lead and molten slag produced in the operation. A siphon tap, *O*, enables the molten lead to flow out of the furnace, and the slag and matte formed are tapped out through the hole, *l*. The special feature for obtaining liquid zinc is the provision of the water-jackets, *bb*, and of channels, *gg*, at the bottom of the water-jackets. The charge contains partly roasted ore, carbon and fluxes, and as it descends in the furnace, the zinc and other metals are reduced to the metallic state, and gases such as carbon monoxide are liberated. A part of these gases is liberated in the upper and cooler part of the shaft, so that the zinc vapor, which is not formed until the ore reaches the hotter part near the bottom of the shaft, is less diluted by permanent gases than it would be if the zinc and the gases were all liberated in a common chamber as would be the case in the furnace of Fig. 131. The zinc vapor passes up the shaft with the other gases, but on reaching the cooler parts of the ore, it is largely condensed and passes down again with the descending ore to the hotter parts of the furnace. The result of this process is that the zinc vapor becomes concentrated in the lower part of the furnace, and finally begins to condense in the liquid state in the vicinity of the water-cooled walls, *bb*. The condensation of the zinc vapor occurs more freely at the sides of the furnace than at the ends, since the former are further from the carbon electrodes, and are therefore cooler. The condensed zinc was intended to flow out of the furnace through the channels, *gg*, beneath the sides of the furnace, and to collect at *hh*. The molten materials in the bottom of the furnace are lead, *L*, matte, *M*, and slag, *S*. The slag becomes congealed around the sides and ends of the furnace, and in this way it was expected to maintain the channel through which the zinc flows. The solidified slag also serves to prevent any leakage of the current into the metal of the water-jacket. Such leakage could take place, however, higher up in the furnace where there is no slag to form a crust on the iron.

The furnace is operated by three-phase current which is supplied by three transformers. The secondary windings of these are connected in star grouping, one terminal of each being connected to one of the three electrodes, and the other terminal to a common conductor leading to the bottom of the furnace.

In smelting a sulphide ore of lead and zinc in this furnace, it is first roasted until the sulphur is reduced to about 8 per cent. and then smelted in admixture with coke or charcoal, and fluxes. The charge is proportioned so that the resulting slag will be high in

lime and silica (at least 50 per cent. of the latter), as such a slag, on account of its high melting temperature, will not retain any considerable quantity of zinc and will have a high electrical resistance. A considerable amount of matte is preferred, enough iron being present in the charge to prevent much of the zinc entering the matte.

With regard to the amount of electrical energy required to smelt a ton of roasted zinc ore the following data may be given. Salgues states that from a 40 or 45 per cent. ore he extracted 5 kg. of zinc per kilowatt-day. This would correspond to 1,660 kw.-hours per 2,000 lb. of zinc ore if the zinc obtained amounted to 38 per cent. of the ore. Casaretti and Bertani[1] produced at Bergamo, Italy, 9 kg. of zinc per kilowatt-day, which, on a zinc extraction of 38 per cent. of the ore, would mean 920 kw.-hours per 2,000 lb. of ore. The author, using a mixed lead-zinc ore carrying about 25 per cent. of each metal, was able to extract both metals with an expenditure of from 800 to 850 kw.-hours per 2,000 lb. of ore, using the ore cold, and in a small furnace of only 15 kw.

In this test the furnace had been charged with molten slag, and heated to the working temperature, before the introduction of the ore-charge. The power measurements being made during the time needed to distil the zinc and smelt the residue. The zinc was obtained almost entirely in the form of powder.

Snyder[2] has made a calculation based partly on the fuel needed in blast-furnace lead-smelting and partly on the heat theoretically needed to reduce and distil zinc from its ores, and gives the formula, $623+5.4$ times the percentage of zinc, for the kilowatt-hours needed per 2,000 lb. of a lead-zinc ore.

A more recent calculation by G. Gin,[3] corrected by J. W. Richards,[4] gives the amount of electrical energy needed for smelting 2,204 lb. of a 50 per cent. zinc ore as 1,530 kw.-hours, or about 1,400 per short ton. The ore was a calcined calamine containing:

ZnO	40.50 per cent.	Zn, 50.05 per cent.
$ZnSiO_3$	38.07 per cent.	
Fe_2O_3	9.60 per cent.	
Al_2SiO_5	8.10 per cent.	
CaO	2.80 per cent.	

[1] Casaretti and Bertani, Report of Commission on zinc resources of British Columbia, 1906, p. 131.

[2] Snyder, Jour. Can. Min. Inst., vol. viii, 1905, p. 130.

[3] G. Gin, The Electrometallurgy of Zinc. Trans. Am. Electrochem Soc., 1907, vol. xii, p. 117.

[4] J. W. Richards, Metallurgical Calculations, vol. iii, p. 611.

Additional lime was added to flux the silica, and carbon equal to twice the theoretical requirement. The gases and zinc-vapor are all supposed to leave the furnace at 1,200° C., and a sufficient allowance has been made for the loss of heat by radiation and conduction.

In discussing Mr. Gin's paper, F. T. Snyder claims to have smelted pure zinc oxide with an expenditure of 1,050 kw.-hours per 1,000 kg. of the oxide (2,204 lb.), the zinc and gases leaving the furnace at about 500° C., and Professor Richards shows that this is theoretically possible, in view of the low temperature at which the products leave the furnace.

Comparing these very different figures, it may be stated that the lower values given by Mr. Snyder, Casaretti and Bertani, and the author, are probably sufficient for the simple distillation of zinc ores or zinc-lead ores of the composition stated, when the gases leave the furnace at a low temperature, and when the resulting slags are easily fusible. In the regular smelting of zinc ores, when it is desired to obtain the metal in the molten state, the gases will usually leave the furnace at a higher temperature, the slag will frequently be somewhat refractory and the smelting cannot be conducted in so economical a manner. Under these conditions, the expenditure of electrical energy will agree more closely with the calculations of Mr. Gin or the figures given by Salgues, that is about 1,500–1,600 kw.-hours for a ton of zinc ore. The figure given by F. W. Harbord, 2,078 kw.-hours per metric ton agrees very well with this when it is remembered that Mr. Harbord's figure includes the smelting of the ore in the ore furnace, and the re-distillation of the blue powder in a separate furnace. The energy necessary for the latter purpose being 500 to 600 kw.-hours per ton of the powder, which was about equal in weight to the original ore. It is probable that marked improvements in the direction of economy will be effected when the conditions necessary for electric zinc smelting are better understood.

Zinc Smelting at McGill.—Experiments on the electrical smelting of zinc-ores have been made in the Metallurgical Laboratory at McGill University, for the Canadian Government, from the year 1910 to 1913. The work has been under the direction of Dr. Eugene Haanel, Director of Mines, and Mr. W. R. Ingalls the well-known zinc expert.

Experiments were made at first to study the distillation and condensation of zinc from spelter and from mixtures of zinc oxide and carbon, in small appliances heated electrically. The next step was

the distillation of zinc from a mixture of oxide and carbon, and from roasted zinc-ore and carbon, in an electrically-heated retort of somewhat larger dimensions; finally the continuous smelting of roasted zinc-ores and lead-zinc ores was attempted in furnaces of 20 k.w. to 30 k.w.

While the author is not at liberty to give particulars of these experiments, it may be stated that the only serious difficulty encountered was the old one of the formation of too large a proportion of "blue-powder" in the condenser, and that this has been partly overcome in the form of furnace finally constructed. The smelting rate in this furnace was quite satisfactory in relation to its size, and this supports the belief that the electric smelting of zinc-ores will become of commercial importance as soon as the "blue-powder" difficulty shall have been more completely overcome.

In regard to these experiments, reference may be made to a paper by Mr. Ingalls on the "Electric Smelting of Zinc Ores."[1]

As the experiments were made on an increasing scale, they finally outgrew the facilities of a College Laboratory, and are therefore to be continued in the electric zinc-smelting plant at Nelson in British Columbia.

PRODUCTION OF LIQUID ZINC

A notable defect in the electric smelting of zinc ores is the difficulty experienced in obtaining the distilled zinc in the liquid state. In the older processes a large proportion of the zinc condenses as a liquid in the clay condensers, which are fitted to the end of each retort, and are hot enough to keep the metal liquid, a small portion passing on to the cooler "prolong" and condensing in this as a metallic powder; but when zinc ores are smelted electrically, very little liquid metal is commonly obtained, nearly all the zinc being in the state of powder.

In the condensation of zinc vapor, all that condenses at temperatures above 419° C. will be in the molten condition (whether in drops or collected together), but below that temperature the zinc will form as a solid powder analogous to snow or hoar frost.[2] The relative amount of zinc which condenses to a liquid and to a solid

[1] W. R. Ingalls, Journ. Can. Inst. Min. Eng., xv, 1912, p. 101. Eng. and Min. Journ., Aug., 1912, p. 481.

[2] Zinc snow or hoar frost is known as "blue powder," and it is impossible to cause this to run together by heating it to the melting temperature.

depends on the extent to which the zinc vapor is diluted with other gases; the greater the dilution, the larger will be the proportion of the solid. Thus in the condensation of moisture from air, rain or dew is formed when a moist wind is cooled, but from nearly dry air no moisture may condense until the air is cooled below the freezing-point, and the moisture will then condense as snow or hoar frost.

The vapor pressure of zinc at its melting-point is only a fraction of a millimeter of mercury (an atmosphere being 760 mm.), and consequently, even if the zinc vapor were diluted with two or three times its volume of inert gases, the amount of zinc that would condense as a solid would be far less than 1 per cent. of the whole, and would be too little to be of any importance. This calculation is made on the assumption that the condensation of zinc vapor at any temperature continues until the residual vapor corresponds in amount to the vapor pressure of zinc at that temperature, and in practice, as the gases move quickly through a condenser, it may be that the condensation is not complete at each temperature, and that the rapidly cooling gases contain, at the melting-point of zinc, more zinc vapor than would correspond to the actual vapor pressure of zinc at that temperature, and in this way a somewhat larger proportion of the zinc would condense as a solid.

The condensation of zinc vapor as a solid is, however, only a very small part of the trouble. The real difficulty lies in the manner of condensation of the zinc at temperatures above its melting-point. The zinc vapor normally condenses on the walls of the condenser forming drops of zinc which grow until they become large enough to run down into the molten zinc lying in the bottom of the condenser. This method of condensation can be observed in the case of water in a surface-cooled condenser made of glass.

An entirely different result is obtained when the zinc vapor condenses, not on the walls of the condenser, but as a cloud of minute drops floating in the gases that fill the condenser. These drops are ultimately deposited from the gases, and accumulate at the bottom and on the walls of the condenser, but unfortunately they do not coalesce with each other even when they are at a red heat and protected from oxidizing gases. This form of condensation is familiar to everyone, as it is seen in the formation of the minute drops of water forming the "steam" which comes from the spout of a kettle, and the "fog" produced when moist air is cooled below its point of saturation. In the zinc-condenser it is probable that both methods of condensation are always in operation, but the mist

of floating droplets not only lessens the amount of vapor that is available for condensing on the walls, but interferes with the normal condensation by covering up the growing droplets.

The minute particles of zinc that form within the mass of the gas fall to the bottom of the condenser before they attain any considerable size, and being covered up with many other particles, they never become large enough to coalesce, and are finally raked out as a mass of minute spheres of zinc. This product which should really be called "grain-zinc," is always included with the zinc snow (deposited below the melting-point), in the general term "blue powder."

The conditions that lead to one or the other method of condensation may be stated as follows:

(1) To obtain surface condensation it is necessary for the condenser to have a sufficiently large surface in relation to its volume and to the amount of zinc to be condensed, and that the condensing surface shall be cool enough for rapid condensation, but still above the melting-point of zinc. If the condenser is a large chamber, this condition will not be fulfilled because the gases will in general be remote from the walls, and the zinc will condense as a mist of floating droplets.

(2) The presence in the furnace-gases of floating particles such as zinc oxide, carbon, silica or ore-dust will interfere with the normal condensation, both by furnishing points on which the zinc-mist can form, just as the particles of water in a London fog form on floating specks of dust and soot, and by covering the surface of the zinc droplets on the condenser walls and so preventing their growth.

(3) The metal zinc is very easily oxidized at temperatures above a red heat, not only by free oxygen, but even by carbon dioxide and water vapor. The presence of carbon dioxide in excess of about 1 per cent. interferes very seriously with the normal condensation of zinc, by forming floating particles of zinc oxide which act as nuclei for the formation of zinc-mist, and by covering with oxide the droplets growing on the condenser walls, thus interfering with their growth, and preventing their coalescence.

(4) Diluting gases, even when neutral, interfere with the normal condensation of the zinc: (a) By lowering the temperature at which the zinc can be condensed; (b) by lessening (slightly) the amount of zinc that can be condensed above the melting point; (c) by interfering mechanically with the transfer of the zinc vapor to the condenser walls. If there were no diluting gases, the zinc vapor would come into

direct contact with the walls, and would condense there rapidly at any temperature below its boiling-point (930° C.), fresh vapor moving up to the walls as fast as the first layer is condensed, but any diluting gases will remain as a barrier between the walls and the uncondensed vapor, and further condensation can only take place as the result of diffusion or convection of the vapor to the walls. The speed of this diffusion and convection is a function of the temperature, and thus the dilution of the vapors, by lowering the temperature of condensation, decreases the rate at which zinc can travel to the walls and so interferes still further with its normal condensation.

The conditions for the condensation of zinc in the molten state may be summarized as follows: The gases entering the condenser must be as free as possible from oxidizing gases and floating particles, and they should contain a large proportion of zinc. The condenser, also, must be suitably designed to afford convenient condensing surfaces. The bearing of this on the electric smelting of zinc ores may now be considered.

When roasted zinc ores are heated with coal in a retort or closed electric furnace, various gases such as steam, hydrocarbons, carbon dioxide and carbon monoxide are given off as the charge is heated to 900° or 1,000° C. Iron oxide, if present, will be reduced and even some of the zinc oxide may be reduced to metal below its boiling temperature—930° C.—according to the equation,

$$ZnO + CO = Zn + CO_2.$$

Above 1,000° C., the only reaction that can take place is expressed by the equation, $ZnO + C = CO + Zn$, and we may therefore consider that zinc and carbon monoxide are given off in this proportion—that is, equal volumes, if we assume that zinc is a perfect monatomic gas at this temperature. The proportion of zinc may be even higher than this during the period of active distillation, on account of zinc which had already been reduced and condensed (temporarily) in the cooler parts of the charge.

The distillation of the zinc takes place regularly, owing to the gradual passage of heat through the retort, and the gases are free from dust. Under these conditions a satisfactory condensation is obtained, some 90 per cent. of the zinc being in the molten condition. This operation can be carried out equally well in an electrically heated furnace (though it is less easy to arrange for the equable heating of the charge) and a good condensation of the zinc can be ob-

tained. The process is intermittent, however, like the distillation of zinc-ore in retorts, a charge being placed in the furnace, gradually heated and the zinc distilled; after which the spent charge is withdrawn, and a fresh charge introduced.

One of the main features of electrical smelting is the possibility of avoiding this step-by-step process, and making the smelting process continuous. In order to obtain the full advantages of electrical smelting, it is essential that the furnace shall operate continuously with continuous or at least frequent introductions of charge, and with continuous distillation and condensation of the zinc. If now we suppose that the ore and coal are charged continuously into the furnace, the escaping gases will contain, in addition to the equal volumes of zinc vapor and carbon monoxide, a considerable amount of additional carbon monoxide and other gases which are liberated at lower temperatures. This additional gas dilutes the zinc vapor and oxidizes part of it, giving rise to large quantities of blue powder in the condenser.

Some experimenters have considered that the oxidation of the zinc by CO_2 was the essential difficulty, and have provided carbon filters, heated to 1,000° C., through which the gases could pass on their way to the condenser. In spite of published statements, the writer doubts whether this method has produced any considerable improvement in the condensation. Another method consists in heating the ore-charge in a closed vessel nearly to the reduction temperature before charging it into the furnace, thus removing a large part of the gases that are evolved at a low temperature and correspondingly increasing the concentration of the zinc.

It appears better to remove the gases as far as possible in this way than to leave them in and merely to deoxidize them with a carbon filter. In this connection it must not be forgotten that in the zinc-retort the ore is mixed with about 50 per cent. of its weight of coal, while in the electric furnace only about 15 per cent. to 20 per cent. can be used, as any more would remain as an infusible residue, and would choke the furnace. The excess of carbon in the zinc-retort doubtless assists in keeping the gases thoroughly deoxidized, and in the electric furnace it is probably desirable on this account to have some heated carbon in the furnace in contact with the gases.

If the above conditions were fulfilled, there would still remain some reasons why the condensation in electric smelting may be less perfect than in the regular practice:

(a) In the retort there is probably an accumulation of metallic

zinc in the charge at the time when distillation commences. This will not usually take place in continuous electric smelting.

(b) It is very difficult in electric smelting to get the same regularity of operation as in the zinc retort.

(c) As the scale of operations is larger in electric smelting, it becomes more difficult to design a condenser having the same ratio of surface to volume as in regular practice.

(d) In electric smelting it is difficult to avoid the production of zones of very high temperature in which silica and other oxides may be reduced, yielding volatile products which may interfere with the condensation of the zinc.

The reduction of zinc oxide to metal is represented by the equation,

$$ZnO+C=CO+Zn,$$

but as the solid carbon cannot come into sufficiently close contact with the solid zinc oxide, it seems probable that carbon monoxide is the actual reducing reagent, the resulting carbon dioxide being immediately reduced to monoxide by the carbon.

$$ZnO+CO=Zn+CO_2$$
$$CO_2+C=2CO.$$

These reactions can only take place at a high temperature (over 1,000° or 1,100° C.), because at lower temperatures the normal proportion of CO_2 would be sufficient to reoxidize the zinc. The temperature at which the reduction of zinc oxide by carbon begins has been determined by W. McA. Johnson,[1] who finds it to vary between about 1,020° C. and 1,080° C., according to the kind of ore and the kind of carbon employed.

The vapor pressure of molten zinc has been determined experimentally by C. Barus,[2] at temperatures up to the boiling-point, and the author has calculated from these data the temperatures at which the condensation of zinc will start from mixtures of zinc and carbon monoxide of varying concentration, and also the temperatures at which 50 per cent. and 90 per cent. of the zinc will have condensed. These results are given in Table XXI, which also shows approximately what percentage of carbon dioxide would tend to form in the gas mixture at each temperature, in consequence of the reaction $2CO=CO_2+C$. Carbon dioxide could not actually form

[1] W. McA. Johnson, "The Reduction Temperature of Zinc Oxide," Trans. Am. Electrochem. Soc., v, 1904, p. 211.

[2] C. Barus, U. S. Geol. Survey, Bull. 102, 1893.

in any quantity, as it would immediately oxidize the zinc by the reaction $CO_2+Zn=ZnO+CO$, but the amount of carbon dioxide shown in the table may be taken as a rough measure of the tendency of the zinc vapor to reoxidize. The two equations written above are equivalent to:

$$CO+Zn=ZnO+C,$$

thus showing that the reaction whereby zinc oxide is reduced by carbon, is reversed at the lower temperature necessary for condensation, and that this reversed reaction takes place the more rapidly as the gas mixture is richer in carbon gases.

The finely divided carbon and zinc oxide resulting from this reaction will tend to coat the growing globules of condensed zinc and prevent their coalescence. We see therefore that no matter how carefully we remove CO_2 and dirt from the gases leaving a smelting furnace, the condensation of zinc can never be perfect, and that these difficulties will increase rapidly with dilution of the gas-mixture. It also appears desirable for the condensation to be effected as rapidly as possible, so that very little time shall be available for this reaction.

TABLE XXI.—CONDENSATION OF ZINC FROM MIXTURES OF ZINC VAPOR AND CARBON MONOXIDE

Zinc in mixture Per cent.	Condensation starts		50 per cent. condensed		90 per cent. condensed	
	Temp.	CO_2 Per cent.	Temp.	CO_2 Per cent.	Temp.	CO_2 Per cent.
100	930° C.	0.0	930° C.	0.0	930° C.	0.0
90	918°	0.3	910°	0.5	860°	2.8
80	908°	0.6	890°	1.3	821°	5.6
70	895°	1.1	872°	2.3	788°	10.1
60	880°	1.8	853°	3.3	758°	18.7
50	865°	2.5	832°	4.7	737°	25
40	846°	3.7	810°	6.8	718°	33
30	823°	5.2	783°	11.5	690°	45
20	792°	9.6	750°	21	660°	55
10	743°	23.7	705°	37	620°	70

Blue Powder.—This consists, as has been stated, of zinc-snow or hoar-frost and also of grain zinc which is analogous to hail. This material does not run together when heated to its melting-point, even when heated in neutral or reducing gases, and it is generally supposed that a film of oxide or other substance is the cause of the non-coalescence of the zinc particles. Blue powder is a constant by-

product of zinc distillation, and is usually worked over with additions of zinc ore, although some can be sold for use as a reducing agent in indigo dyeing,[1] and gold cyaniding. At one time blue powder was heated and pressed,[2] yielding molten zinc, but the practice has been discontinued.

The powder can be melted with the aid of a suitable flux such as zinc chloride, but a considerable proportion of the flux is required. Another process consists in adding the powder to an electrolytic bath of fused zinc chloride, having a carbon anode. Any oxide of zinc will dissolve in the chloride and will be electrolyzed, while the metallic zinc, freed from oxide or other coating, will run together.

The electrical energy needed amounts to about 1/10 kw.-hour per pound of zinc, and the loss of chloride is about 1/25 lb.[3] The process is apparently cheaper than that of redistilling the powder, and may overcome the objection to the formation of blue powder in electric smelting, but electric-furnace blue powder often contains a proportion of fine ore dust and carbon, which will tend to choke the bath and increase the consumption of chloride.

The following electric zinc processes and furnaces may be described as illustrating the directions in which improvements have been attempted during recent years:

The Côte-Pierron zinc process and furnaces.
The Imbert zinc process and Thomson-FitzGerald furnace.
The Johnson zinc furnace.
The Thierry zinc furnace.
The Louvrier-Louis zinc furnace.

The Côte-Pierron process[4] is intended for the treatment of mixed sulphides of lead and zinc. The ore is not roasted to oxide but treated in the raw state with enough iron to combine with the sulphur. The lead is reduced first at a moderate temperature, and then the temperature is raised for the reduction of the zinc, which takes place according to the equation

$$ZnS + Fe = FeS + Zn.$$

[1] W. R. Ingalls, Metallurgy of Zinc, First Ed., p. 667.

[2] W. R. Ingalls, Metallurgy of Zinc, First Ed., p. 527.

[3] W. F. Blecker, Electrolytic Reduction of Blue Powder, Trans. Am. Electrochem. Soc., xxi, 1912, p. 359.

[4] E. Fleurville, La Houille Blanche, vol. vii (1908), p. 273; Electrochem. and Met. Ind., vol. vii (1909), p. 468.

Dr. Eugene Haanel, "Recent Advances in the Construction of Electric Furnaces for the Production of Pig-iron, Steel and Zinc." Ottawa, 1910.

The furnace, shown in Fig. 133, is cylindrical and is lined with graphite, but the roof and condenser are built with bricks. A coni-

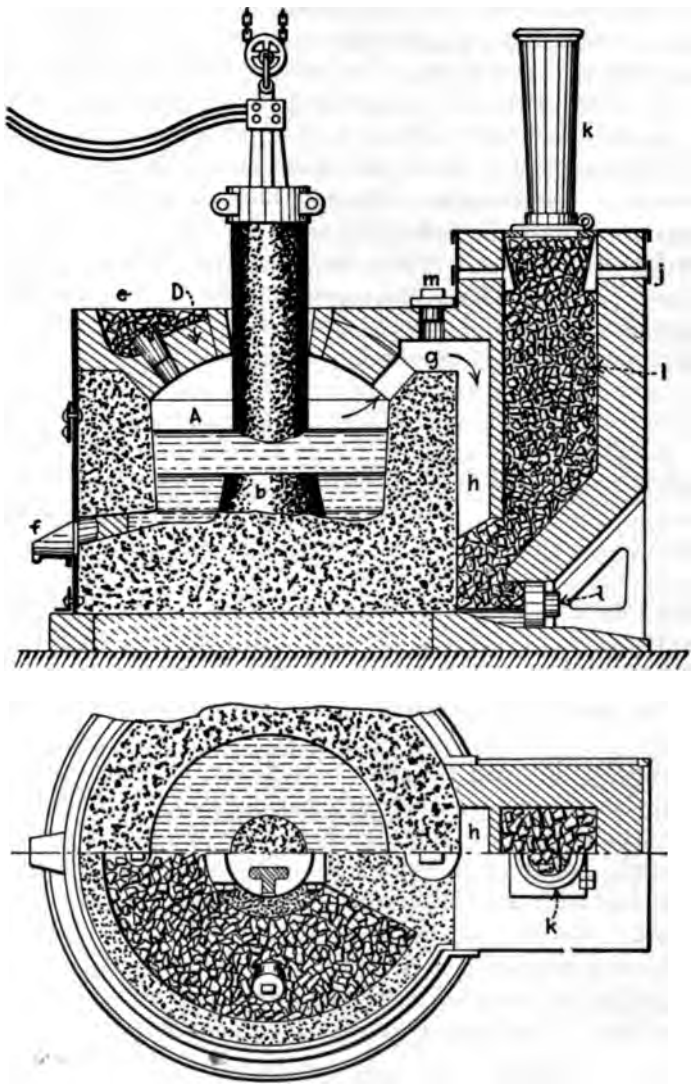

FIG. 133.—Côte-Pierron furnace.

cal electrode, *b*, forms part of the bottom of the furnace, which is connected to one pole of the electrical supply, and a movable electrode enters through the roof of the furnace. The heating is effected by re-

sistance when a low temperature is needed for the reduction of the lead, and by an arc, when a higher temperature is needed for the reduction of the zinc; the electrode being lifted out of the slag. The charge of ore and iron is preheated on the roof of the furnace, and introduced by the openings, *e*; the reduced lead and the slag being tapped out by the hole, *f*. The volatilized zinc escapes by the passage, *g*, and condenses partly in *h*, and partly in the condenser *I*, which is kept full of pieces of red hot carbon to provide an extensive surface for its condensation. The zinc collects at *l*, and the column of carbon can be heated by admitting air at *j*.

In treating an ore containing lead and zinc, the lead is reduced first, at a low temperature, and tapped out of the furnace before the temperature is raised for the reduction of the zinc. In this way there is less contamination of the zinc by volatilized lead.

As zinc is the only gaseous product of the reaction between zinc sulphide and iron, it is undiluted by carbon monoxide or other gases, and should condense readily to the molten condition. The process avoids the necessity of roasting the ore, but incurs a larger expense for metallic iron to carry out the reduction; 1,800 lb. of iron being needed to produce 2,000 lb. of zinc, and in addition, about 600 lb. for every 2,000 lb. of lead.

The Côte-Pierron process has been tried on a large scale in the south of France, but does not appear to have made much headway.

The Imbert Zinc Process.[1]—This resembles the Côte-Pierron process as it depends on the reaction between zinc sulphide and metallic iron.

It consists in fusing the zinc ore with suitable fluxes, and then pouring into the fused mass the necessary amount of melted pig-iron. The reaction takes place immediately yielding zinc and an iron matte. A mixture of one part of ferric oxide and three parts of iron sulphide form a fluid bath at a temperature between 1,000° C. and 1,100° C., and will "dissolve" six parts of blende.[2] When this mixture is treated with iron, the zinc is liberated, nearly completely, as vapor, and the residue consists of a slag and a matte of iron sulphide which can be used for the next operation. This process is not necessarily

[1] A. H. Imbert, U. S. patent 85,579, Dec., 1907. M. Imbert's original idea was to use metallic copper as the reagent; the copper being recovered from the resulting sulphide by the usual methods and used over again. A. H. Imbert, U. S. patent 807,271, Dec., 1905.

[2] F. A. J. FitzGerald, "A New Electric Resistance Furnace," Trans. Am. Electrochem. Soc., xix, 1911, p. 273.

electrothermic, and was tried at first in gas-fired or oil-fired furnaces, but as the reaction must be effected in closed vessels, from which air must be excluded, electrical heating is particularly adaptable.

The Imbert process has been tried in upper Silesia in the Thomson-FitzGerald resistor furnace,[1] which is shown diagrammatically in Fig. 134. A permanent carbon resistor, *RR*, forms the roof of the furnace, thus heating the charge by radiation. The resistor is composed of a number of wedge-shaped carbon rods having their narrow edges alternately up and down. The bars having their edges up are supported by the sides of the furnace, while the other bars are dropped in between, making electrical contact with them. This arrangement provides a constant degree of contact between the bars, in spite of any expansion or contraction, the upper rods rising or falling to take up such changes. The heat is produced mainly at the contacts be-

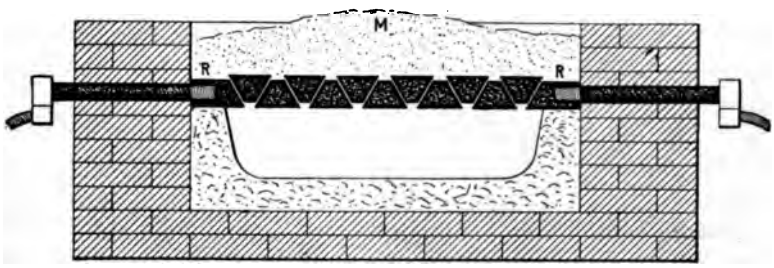

FIG. 134.—Resistor zinc furnace.

tween the wedges, but the whole series of bars will become strongly heated, and will radiate the heat into the cavity of the furnace.

It is of course essential to maintain a non-oxidizing atmosphere in the furnace, or the carbon rods would soon burn up. The resistor bars are covered with a layer of burnt magnesite, *M*, which serves to retain the heat and exclude the air.

In operating the Imbert process, the resistor furnace formed the reaction chamber into which were charged the molten iron and the "dissolved" zinc ore. The zinc vapor passed out to a condenser and the slag and matte were then tapped from the furnace.

The first furnace built on this plan had a capacity of 550 lb. of pig-iron and employed 40 kw. The radiation loss at 1,300° C. was 18 kw., showing an efficiency of 55 per cent. A larger furnace of

[1] F. A. J. FitzGerald, "A New Resistor Furnace," Met. and Chem. Eng., viii, 1910, p. 317.

Radiation Resistor Furnace, Met. and Chem. Eng., viii, 1910, p. 289.

150 kw. was then built, having the carbon resistor arched from end to end of the furnace, as in Fig. 15. This radiated 33 kw. at 1,250° C., giving an efficiency of 78 per cent. when worked at 150 kw.

The Johnson zinc furnace[1] is shown in Fig. 135.[2] It consists of a smelting chamber, *C*, provided with three carbon electrodes, a charging chute and two tap holes. Two of the electrodes are movable, entering through the roof, and the third forms part of the bottom of the furnace. The furnace contains molten lead, *L*, which has been reduced from the ore, and above that a layer of molten slag, *S*, on which the ore charge rests. Heat is produced partly in the slag and partly in the charge around the upper electrodes. Roasted ore is used, consisting mainly of oxide of zinc, and of lead when present, together with oxide of iron and gangue matter. The roasted ore,

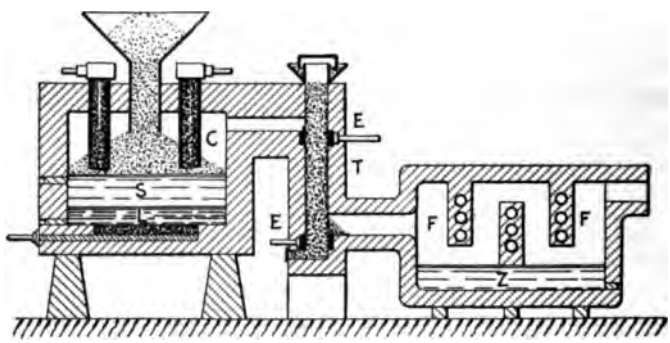

FIG. 135.—Johnson zinc furnace.

mixed with carbon for its reduction and lime or other flux, is charged by means of the hopper and chute. The liberated zinc vapor, with diluting gases, pass off by a channel and descend through a tower, *T*, filled with broken carbon which is heated to at least 1,000° C. by an electric current which passes between the electrodes, *E E*. This serves to reduce any carbon dioxide to carbon monoxide, and so to avoid oxidation of the zinc vapor. The gases then enter the condenser, *F F*, which is kept above the melting-point of zinc. It is provided with baffle walls, which are air-cooled (by enclosed pipes) to remove the heat of condensation of the zinc, which collects in the molten condition at *Z*. No preheater is provided for

[1] J. W. Richards, Trans. Am. Electrochem. Soc., xix, 1911, p. 311.
[2] W. McA. Johnson, U. S. patent 964,268, July, 1910.

the removal of gases from the ore charge, and the reducing filter does not overcome the dilution of the zinc vapors. The carbon filter appears, moreover, in view of the experiments at McGill University, to interfere with the subsequent condensation of the zinc vapor. In an electrically heated filter there will probably be points sufficiently hot to produce volatilization of carbon, silica or other substances which will give trouble in the condenser.

In more recent accounts,[1] no details of the design are given, but it is stated that the ore charge is heated to about 900° C. in a continuous preheater, and the photographs suggest that the zinc is condensed in a number of iron pipes. A considerable improvement has been effected in regard to the condensation, but it is necessary to smelt slowly to secure a good condensation, and this increases the cost of the process. The amount of electrical energy needed is expected to be 800 kw.-hours per short ton of a 30 per cent. roasted ore and 1,400 kw.-hours for a 70 per cent. ore when working on the large scale, but the consumption in the 36-kw. experimental furnace in one test was 1,490 kw.-hours for a short ton of a 39 per cent. roasted ore. A typical slag analysis is: 40 per cent. SiO_2, 22 per cent. CaO, 2 per cent. MgO 10 per cent. FeO, 1 per cent. MnO, 10 per cent. Al_2O_3, 2 per cent. ZnO, 0.15 per cent. Cu, 0.05 per cent. Pb and 0.30 oz. Ag per ton. The ore is roasted until the sulphur is reduced to from 3 per cent. to 6 per cent., depending on the amount of copper present, and the silver is collected in the lead bullion, or if no lead is present, in a matte. On account of the strong reduction of the electric furnace, this matte is lower in lead than is usual in a lead blast-furnace; a typical matte containing 45 per cent. of iron, 25 per cent. of copper and 29 per cent. of sulphur.

A paper by W. McA. Johnson,[2] which has just appeared, gives further particulars of the success recently obtained by the Continuous Zinc Smelting Co. with the Johnson zinc smelting process. The zinc condensed amounts to more than 80 per cent. of the zinc in the ore, and 70 or 80 per cent. of this is in the form of spelter. The short ton of preheated ore takes from 938 to 1748 k.w. hours in different runs, depending partly on the zinc contents.

Mr. Johnson considers the process especially suitable for low-grade zinc ores containing considerable quantities of lead, copper gold and silver, which will be recovered as by-products.

[1] Met. and Chem. Eng., x, 1912, pp. 281 and 537.

[2] W. McA. Johnson, "The Art of Electric Zinc Smelting, Am. Electrochem. Soc. xxiv, 1913.

The Thierry zinc furnace,[1] shown in Fig. 136, is intended for the treatment of pure zinc oxide, free from gangue or slag-forming material; the oxide having been obtained by the Wetherill or other process. The furnace is provided with a carbon resistor (shaded darkly) on which rests the mixture of zinc oxide and carbon, *O*. Additional quantities of ore mixture are being heated in trays, *TT*, before being charged through the central hopper, *H*. Heat for the reduction of the zinc is produced by the passage of an electric current through the resistor. The products of the reaction (zinc vapor and carbon monoxide), pass into the lateral condensers, *CC*, which contain coarse coke. The carbon of the resistor and adjacent coke at a high temperature serves to reduce any volatilized zinc oxide or carbon dioxide,

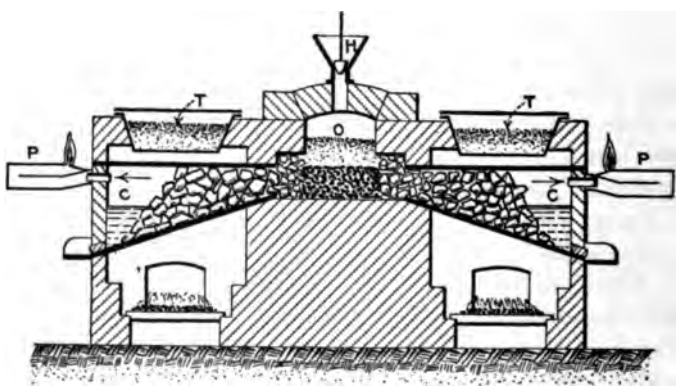

FIG. 136.—Thierry zinc furnace.

and the cooler coke provides a large surface on which the zinc can condense. The uncondensed gases pass through the cooler "prolongs," *PP*, where most of the remaining zinc is condensed before the carbon monoxide escapes and is burnt. Tapping holes are provided for withdrawing the molten zinc, and fires, if necessary, for keeping the condenser above the melting-point of zinc. The inventor claims to have run such a furnace continuously for weeks, producing zinc at the rate of about 75 lb. per hour. It seems very probable that the condensers would become choked with zinc-powder, and would need frequent poking to keep a clear passage through the coke.

Louvrier-Louis Zinc Furnace.—This is shaped like an iron blast-furnace and is provided with a number of carbon electrodes built into

[1] C. V. Thierry, of Paris, U. S. patent 1,030,349–50, June, 1912, Met. and Chem. Eng., x, 1912, p. 490.

the walls of the boshes, and one in the bottom of the crucible; two-phase or three-phase current being employed. In this way the charge is heated moderately, for the distillation of the zinc; and then more strongly to fuse the residues. The zinc vapors escape from the charge and pass to the condenser through lateral openings in the lower part of the stack; a ledge being placed above the openings so that the ore shall not enter them. The upper part of the shaft serves to preheat the charge, and to remove part of the carbon monoxide, which passes upward depositing the accompanying zinc on the descending ore, as in Snyder's furnace, Fig. 132.

ELECTRIC SMELTING OF OTHER METALS

In regard to the application of the electric furnace to the production of the common metals from their ores the following general statements may be made:

(1) The production of iron and steel has already been fully discussed.

(2) The electric smelting of zinc ores has always appeared particularly hopeful in view of the peculiar conditions necessary for the reduction of this metal.

(3) Ores containing copper, lead, tin, nickel or other metals in an oxidized state are, at present, smelted with carbonaceous fuel which serves to reduce the oxides to metals, and to furnish heat for fusing the metal and slag, just as in smelting iron-ores. These operations can be carried out equally well, and often somewhat better, in an electric furnace, and this method can be adopted whenever the cost of electrical power is sufficiently low and that of fuel sufficiently high to render the change commercially desirable. In smelting such ores, it is essential to reduce the oxides of copper, lead, tin or nickel to the metallic state, but *not to reduce* the *oxide of iron* which usually accompanies them; the iron not being desired in the reduced metal, and the iron oxide being greatly desired in the slag. A selective reduction is therefore essential, and can be maintained more accurately in the electric furnace than in fuel-fired furnaces, as the carbon added serves merely as a reducer and is not needed for supplying heat.

Careful design would be needed in such furnaces to avoid an excessive loss of the carbon electrodes through the action of slags rich in oxide of iron.

Examples of the electric smelting of oxidized ores of tin, copper

and nickel are given later. Ores containing copper in the metallic state could also be smelted electrically; no carbon being added to the charge.

(4) Ores containing copper, nickel or cobalt as sulphide or arsenide are usually smelted in a blast-furnace, often without preliminary roasting, and the sulphur (or arsenic) and the iron, with which they are usually associated, are oxidized by the blast, affording a material part of the heat needed for the fusion of the ore. The product of this operation is a matte (sulphides) or speiss (arsenides), containing the valuable metals and part of the iron, and a slag (oxides) containing the earthy matter and most of the iron.

The objects of the operation are two: (a) to fuse the ore and so to separate the sulphides or arsenides from the earthy matter, and (b) to oxidize part of the sulphur (or arsenic) and iron, which would otherwise have remained with the copper or nickel, so as to cause the sulphur to pass off as a gas, and the iron to pass as oxide into the slag. Such an operation is comparatively foreign to ordinary electric-furnace practice, partly because an air blast is necessary for oxidation, and partly because so little fuel is needed in the blast-furnace that there seems little incentive to replace it by electrical energy. Little has been done in this direction, but the author is of the opinion that the combination of the blast-furnace with the electric furnace is practicable, and would secure material advantages in some cases, provided of course that cheap electrical power could be obtained.

Examples of the electric smelting of ores of copper, nickel, tin and lead will now be given:

Copper.—Sulphide ores of copper, in which the sulphur was not much more than was required to make a high-grade matte, were smelted in a Keller furnace at Livet in France in the year 1907, and yielded a good matte and a clean slag, as shown by the following analyses:[1]

Eight metric tons of the charge were smelted in eight hours, using 500 kw., the average current being 4,750 amperes at 119 volts, with a power factor of 0.9. The consumption of electrodes was 6 or 7 kg. per ton of charge. The consumption of electrical energy amounted to 500 kw.-hours per ton of charge, and a furnace smelting 100 tons daily would need 3,000 electrical horse-power.

[1] M. Vattier, Report of Canadian Commission on Electric Smelting in Europe, Ottawa, 1904.

TABLE XXII.—ELECTRIC COPPER SMELTING

	Ore Charge	Slag	Matte
	Per cent.	Per cent.	Per cent.
Copper	5.10	0.10	47.90
Iron	28.50	32.50	24.30
Manganese	7.64	8.23	1.40
Sulphur	4.12	0.57	22.96
Phosphorus	0.05	0.06	0.01
Silica	23.70	27.20	0.80
Alumina	4.00	5.20	0.50
Lime	7.30	9.90	.....
Magnesia	0.33	0.39	.....
Carbonic acid	4.31	.....	.....

The furnace consisted of a rectangular chamber 6 ft. by 3 ft. inside and 3 ft. high, provided with two carbon electrodes, 12 in. square, suspended in the furnace with their lower ends slightly above the slag level and surrounded with the ore charge. A fore-hearth or settling chamber 4 ft. by 2 ft. and 2 ft. high was heated by two electrodes each 9 in. square, and served to complete the separation of the matte and slag, as in ordinary practice. It need not be added that no coke or other fuel was used in this operation (as would be needed in iron smelting), the process being mainly a simple fusion of the ore for the separation of the sulphides, as matte, from the oxides, which form slag. Part of the sulphur in the charge has been removed by volatilization or oxidation.

About 0.08 E.H.P. years of electrical energy, and 12 lb. of electrodes are used per short ton of charge. Taking the power at $15, and the electrodes at 3 cents, gives a cost of $1.20 for power and 36 cents for electrodes. This ore could be smelted in a large water-jacketed blast-furnace with 12 per cent. to 15 per cent. of coke. If the coke can be obtained at a reasonable rate, say $6 a ton, the cost for fuel will be about 80 cents, and the blast-furnace treatment will clearly be cheaper than electric smelting; but in places where coke is very costly and especially if electrical power can be bought at less than $15, electric smelting may become the better method.

In comparing the two methods, it should be remembered that the electric furnace will in general produce somewhat cleaner slags than the blast-furnace, that it can treat difficulty fusible ores more readily, and that powdery ores will not be so objectionable as in the blast-furnace.

In smelting strongly pyritic ores, it is necessary to oxidize in the

furnace a large proportion of the sulphur and associated iron, in order that a sufficiently high-grade copper-matte can be obtained. This is accomplished in "Pyritic Smelting" by the use of a large amount of air and a small amount of fuel (about 5 per cent. of the charge), so that the conditions are strongly oxidizing and the sulphur and iron are largely oxidized; incidentally furnishing most of the heat needed for the reaction. In order to oxidize the sulphur and iron, the fuel in the charge must be kept very low, and as it is practically all burnt before reaching the zone of fusion, there is danger of the furnace "freezing." Electrical smelting would seem particularly suitable for such an operation. A smelting shaft, provided with tuyeres like an ordinary blast-furnace, would terminate below in a crucible, heated electrically, where the half-melted materials would be reduced to a state of perfect fusion. Such a furnace could be started with fuel, and then the electric current could be switched on and the fuel-supply discontinued or greatly reduced. In such a furnace the ore itself would supply nearly all the heat; the small proportion furnished electrically merely serving to make good a small deficiency of heat and to improve the general working of the furnace. The electrodes would enter the furnace at a point below the tuyeres, so as to be protected from the blast. Dr. Héroult,[1] has patented a furnace for this purpose, in which the electrode passes down through the charge, but is protected from the air blast by a water-cooled jacket. The lower end of the electrode, which is in contact with the charge, is below the tuyere level.

The most serious consideration in designing such a furnace would be to keep down the electrode consumption, which would probably be excessive if carbon electrodes were exposed to the descending stream of oxidized slag.[2]

Nickel.—Oxidized ores of nickel have been smelted electrically at the plant of the Consolidated Nickel Company at Webster in North Carolina.[3] The ore is a hydrous silicate of magnesium and nickel, which is very variable in composition, and generally contains less than 2 per cent. of nickel. The ore was smelted in a simple electric furnace with the addition of crushed coke, the prod-

[1] P. L. T. Héroult, U. S. patent 930,666, 1909, Electrochem. and Met. Ind., vii, 1909, p. 407.

[2] The use of electric heat in the copper blast-furnace and reverberatory furnace was suggested by S. B. Ladd, Met. and Chem. Eng., viii, 1910, p. 7.

[3] W. L. Morrison, "Electric Furnace Treatment of Nickel Ores and the Development of a Commercial Process," Trans. Am. Electrochem. Soc., xx, 1911, p. 315.

ucts being a nickel-ferrosilicon and a fusible slag of remarkable composition, as shown in the following table:

TABLE XXIII.—ELECTRIC NICKEL SMELTING

Metal Per cent.		Slag Per cent.		
Nickel	13–14	Silica	40–45	Lime 3–10
Iron	55–57	Alumina	20–30	Magnesia 15–20
Silicon	24–27	Ferrous oxide	0.5–2	Nickel oxide 0.4–0.8
				Alkalies 5 9

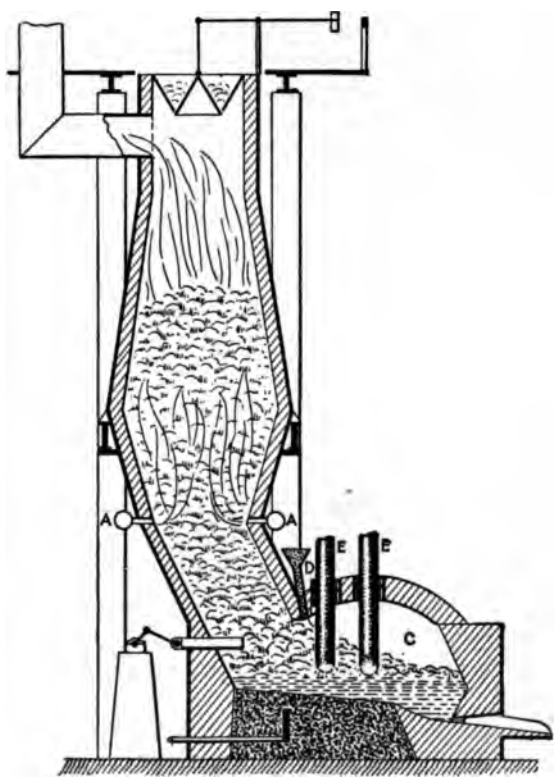

FIG. 137.—Nickel furnace.

The furnace was similar to the Héroult furnace used for smelting iron-ores at Sault Ste. Marie (Fig. 78). The power used was about 170 kw., and 3.5 metric tons of ore were smelted per 24 hours, giving an energy consumption of 800 kw.-days per short ton of ore.

Mr. Morrison has designed a shaft furnace, Fig. 137, for smelt-

ing nickel ores, although he does not recommend it for use with the Carolina ores, which are very powdery. The furnace consists of a smelting chamber, *C*, having a carbon hearth, *H*, which forms one electrode, and a number of movable electrodes, *E E*, entering through the roof and connected to the other pole of the electrical supply. The shaft of the furnace is placed at one side of the smelting chamber, and reciprocating plungers are provided for moving the charge into the latter. Each electrode is provided with a water-cooled collar which serves to hold it and to supply the electric current. A supply of coke is admitted close to the electrode at *D* in order to reduce the electrode-consumption, and tuyeres, *A A*, supply air to the shaft for burning the combustible gases formed in the smelting chamber. The author has illustrated this furnace, although it has not been constructed, as it typifies the combination of a blast-furnace and an electric smelting furnace, such as might be used for smelting pyritic ore without fuel. (See Copper.)

Tin.—The electric furnace has been used successfully for smelting the tin drosses produced in a tin-plate works.[1] The operation was carried out in a small shaft furnace, 20 in. in diameter and 80 in. high inside. One electrode was in the bottom of the furnace, and the other was suspended within the shaft. Some slag was first melted in the furnace, and then the dross was added with enough carbon for its reduction. The process is very satisfactory, as there is little loss of tin by volatilization or in the slag, and the reduced metal is refined in passing through the slag.

The smelting of tin ores is effected either in a small blast-furnace, or in a reverberatory furnace. The losses by volatilization are heavy in the blast-furnace, and the reduction is imperfect in the reverberatory furnace. In view of the high price of tin, it would seem probable that the electric furnace could be employed profitably for tin-smelting, on account of the saving of metal which it would almost certainly make.

Lead.—This metal is reduced so easily from its ores by the usual methods, that it would hardly seem likely that electric smelting could be profitably substituted. Lead ores are usually smelted in the blast-furnace, but there is a decided loss by volatilization, and very rich ores cannot be smelted in that way, as the losses would be too high. They are therefore often smelted in a reverberatory furnace by a combined process of roasting and reaction. This process is not

[1] R. S. Wile, "Reduction of Tin Dross in an Electric Furnace," Trans. Am. Electrochem. Soc., xviii, 1910, p. 205.

very economical, and the losses by volatilization and imperfect reduction are so high that it may pay, where electrical power is cheap, to smelt such ores in the electric furnace. It has already been shown, in connection with zinc smelting, that the electric furnace reduces lead ores very effectively, and the losses by volatilization will be small.

CHAPTER XIII

MISCELLANEOUS USES OF THE ELECTRIC FURNACE

NITRIC ACID AND NITRATES

Although nitrogen is an inert element, and will not combine with oxygen, under ordinary circumstances, yet at the high temperature of the electric arc it does form an oxide. This presents the apparently curious case of a furnace in which the air serves for fuel as well as to support combustion. It is hardly correct, however, to call nitrogen a fuel because its oxidation is very slow and partial and no heat is produced by the reaction.

The fact that oxygen and nitrogen would combine in the electric arc was discovered by Priestley, and in 1785 by Cavendish. It was investigated by Crookes in 1893 and used by Rayleigh in 1897 for the separation of argon from the air. Recently the reaction has been utilized for the manufacture of nitric acid and nitrates. A number of processes for this purpose were patented in the years 1895–96. The first process to be tested on a commercial scale was that of Bradley and Lovejoy, which was tried at Niagara Falls in 1902, but proved unsuitable for commercial purposes. A process by Kowalski and Moscicki was also tried on a commercial scale in Switzerland in 1903, but has since been abandoned. The first process which proved successful on a large scale was that of Birkeland and Eyde, invented in 1903, which is now in operation in Norway, and at the present time the processes of Pauling and Schönherr are also in commercial operation.

Before describing these in detail a general account may be given: In each process a high-tension electric arc is used and air is forced through or over the arc. At the high temperature of the arc it is probable that the nitrogen and oxygen in the air partly dissociate into their constituent atoms which recombine to form nitric oxide.

$$N_2 = 2N, \qquad O_2 = 2O,$$
$$2N + 2O = 2NO.$$

This reaction is reversible and only proceeds to a definite limit which varies with the temperature. The following are the maxi-

mum percentages by volume of nitric oxide which can be formed:

At 1,500° C.	0.5 per cent. NO.
At 2,000° C.	1.0 per cent. NO.
At 3,000° C.	5.0 per cent. NO.

These percentages have been determined experimentally, and agree very well with the percentages calculated by Nernst from theoretical considerations. It will be seen that the proportion of nitric oxide increases very rapidly with the temperature, and it is, therefore, desirable to heat the air as strongly as possible in the electric furnace. As the reaction is reversible the nitric oxide tends to dissociate while cooling from the temperature of the furnace, and it is consequently necessary that the gases after being heated shall be cooled as rapidly as possible to avoid this decomposition of the nitric oxide. In practice the gases leaving the furnace contain from 1 per cent. to 2 per cent. of nitric oxide. The gases leave the furnace at a temperature of about 900° C. to 1,000° C., and after cooling to 600° C. the nitric oxide begins to combine with oxygen to yield nitrogen peroxide. This reaction is not complete until the gases have cooled to 130° C. and even at this temperature the reaction proceeds slowly. The reaction is expressed in the following equation:

$$2NO+O_2=2NO_2$$

Actually, however, the reactions are less simple than this, and the gases contain various oxides of nitrogen, such as

$$NO,\ N_2O_3,\ NO_2 \text{ and } N_2O_4.$$

After the gases have been cooled to about the ordinary temperature they are allowed to react with water, forming nitric and nitrous acids as shown by the equations:

$$3NO_2+H_2O=2HNO_3+NO$$
$$N_2O_4+H_2O=HNO_3+HNO_2$$
$$N_2O_3+H_2O=2HNO_2$$

The nitrous acid decomposes yielding nitric acid and nitric oxide.

$$3HNO_2=HNO_3+H_2O+2NO$$

Most of the nitrous gases can be collected by means of water as nitric and nitrous acid, but a part escapes after this treatment and can only be collected in a solution of carbonate of soda or milk of lime.

The nitric acid is collected in towers where the gases meet a descending stream of water; by using a number of towers, in series, and passing the liquid from the bottom of one tower down the next in such a way that the liquid and the gases move in opposite directions through the series of towers, nitric acid of a strength of 30 per cent. to 40 per cent. pure acid can be obtained. This acid can be further enriched to at least 50 per cent. by evaporation in contact with the hot gases. The concentrated acid can be sold, or the dilute acid from the towers may be used to dissolve limestone for the production of calcium nitrate, which is utilized for a fertilizer.

Returning to the furnace, the general principle of each furnace is to spread out an electric arc so that it shall fill a large space, to blow air, which may be heated, through the arc, and to remove and cool the air as rapidly as possible. Alternating current is almost universally employed for the arc. In order to maintain a steady arc it is necessary to use a resistance coil or an inductance coil in series with the arc. The inductance coil wastes less energy than a resistance coil, and is, therefore, used, although it necessarily lowers the power-factor of the apparatus.

Birkeland and Eyde Furnace.—In this furnace an alternating-

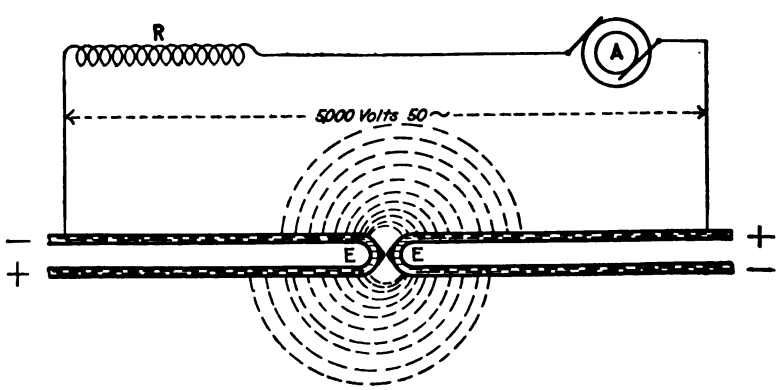

FIG. 138.—Birkeland-Eyde furnace.

current arc is formed between the ends of two water-cooled copper electrodes, *E E*, as shown in Fig. 138, and a strong magnetic field at right angles to the arc causes it to move either upward or downward. As the arc is deflected it becomes longer, its ends running along the electrodes, while the arc itself keeps a roughly semi-circular form as shown by the dotted lines in the figure. As the current is alternat-

ing, and the magnetic field is steady, being produced by a direct-current electro-magnet, the arc is deflected alternately upward and downward, and the result is a large disc of flame, which is about 6 ft. in diameter This disc-shaped arc is enclosed in a furnace made of fire-brick, as shown in Fig. 139, and air is blown in through the openings *B B* and enters the arc from both sides by a number of small passages through the brickwork. After traversing the arc, the gases enter the passage *A A*, from which they are removed by the pipe *D*. The spreading of the arc may be assisted by the radial movement of the air within the furnace. The brickwork of the furnace is contained within a cast-iron case, which is made in two parts; and the electrodes are separated from the walls of the

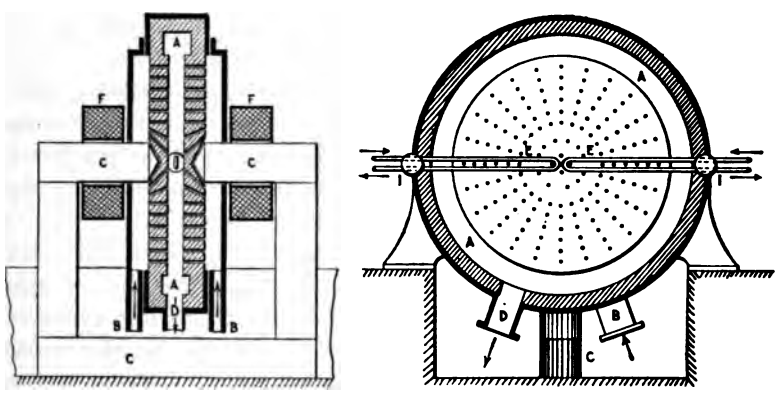

FIG. 139.—Birkeland-Eyde furnace.

furnace by the insulators *I I*. The electrical arrangement is shown diagrammatically in Fig. 138, consisting of an alternator *A* and a reactance coil *R*.

The magnetic field is produced by an electromagnet, consisting of a laminated iron core, *C C*, (Fig. 139) and coils of wire, *F F*, which are supplied with direct current.

The furnaces are made in various sizes from 200 to 2,000 kw. A 1,600-kw. furnace gives a flame about 6 ft. 6 in. in diameter, and takes a current of 500 amperes at 5,000 volts. The reactance coil lowers the working voltage at the arc to about 3,500 volts, thus giving a power-factor of about 70 per cent. Three-phase 50-cycle current is supplied at 10,000 volts and two furnaces are connected in series so that the voltage for each furnace is 5,000.

The temperature of the arc in the furnace is supposed to be about

3,000° C. but, on account of the cold air entering through the walls, the fire-brick of the furnace is not heated much above 700° C. The brickwork is found to last for five or six months, and the electrodes need replacing after three or four weeks. The electrodes are made of copper tubing and their ends, which are renewable, are less than 1 cm. apart. They very seldom need regulating and the furnace itself gives ample warning when any adjustment is needed by the roaring of the arc.

In Fig. 138 it will be noticed that the arc is not quite concentric. This is caused by the different behavior of the arc at the positive and the negative electrodes. If the lines of magnetic force are passing outward at right angles to the plane of the figure, and if, at any moment, the right hand electrode is positive (as shown by the upper $-+$ signs) the arc will be deflected upward. As the arc expands, its extremities move more quickly along the positive than along the negative electrode, and therefore the semicircle of flame is shifted a little to the right. When the electric polarity has been reversed (as shown by the lower $+-$ signs) the arc is forced downward by the magnetic field, and moving more rapidly along the positive than the negative electrode is shifted to the left.

The gases leaving the furnace are passed through a boiler for raising steam, then through a system of aluminium pipes, cooled with water, and then into oxidation towers, which are iron cylinders lined with acid-proof stone. The gases next pass to the absorption towers, which are built of granite and are filled with broken quartz, down which trickles water and dilute acid. The gases finally pass through wooden towers where they meet a solution of soda for absorbing the remainder of the nitrous gases. The absorption is nearly complete, 97 per cent. of the nitric oxide being ultimately collected. The nitric acid from the towers contains about 30 per cent. pure acid and is used for the production of calcium nitrate by adding it to limestone in granite receptacles. The gases leaving the furnace contain from 1.0 to 1.5 per cent. of nitric oxide; the amount of nitric oxide formed is probably from 500 to 600 kg. of pure acid per kilowatt year, although one writer has stated that 900 kg. are formed. The amount of air used is about 50 liters per minute for each kilowatt employed. This would correspond to a production of about 1 per cent. nitric oxide in the air. For a richer product less air would, of course, be used.

The number of furnaces in operation is about 36, employing 30,000 h.p. An additional development of power has been ar-

ranged for at Rjukanfos of 180,000 h.p. for this process, and it is expected that a production of 100,000 tons per annum of calcium nitrate will soon be effected.

The cost of electrical power at Notodden is about $4 or $5 per horse-power year, corresponding to about 0.04 cents per kilowatt hour.

REFERENCES TO THE BIRKELAND AND EYDE PROCESS

Kr. Birkeland, "The Oxidation of Atmospheric Nitrogen in Electric Arcs," Trans. Faraday Soc., vol. ii, 1906, p. 98.

J. Zenneck, Met. and Chem. Eng., vol. ix, 1911, p. 73.

E. Lamy, Met. and Chem. Eng., vol. ix, 1911, p. 100.

J. S. Edstrom, Am. Electrochem. Soc., vol. vi, 1904, part II, p. 17.

E. K. Scott, "The Manufacture of Nitrates from the Atmosphere," Jour. Roy. Soc. Arts., lx, 1912, p. 647.

The Pauling Furnace.—In this furnace the electrical flame is spread by means of a jet of air instead of by a magnet. The arc is formed between two water-cooled steel electrodes, shaped like the horns of a lightning arrester. These electrodes may be curved or may be straight as shown in Fig. 140. The arc is formed between the electrodes at their nearest point and is forced upward by a blast of heated air from the tuyere *T*. As the alternating current reverses, the arc dies away, and a new arc is struck and is again forced up by the air blast; in this way a continuous flame is maintained which may be 2 ft. or 3 ft. in height. The electrodes are necessarily about 1.5 in. apart, in order to allow the passage of the air. This distance is too great for the formation of the arc, and, therefore, lighting knives are employed for starting the arc; these are thin blades of copper which pass through a slot in each electrode and nearly meet in the middle of the gap, as shown in black in the figure. The arc is formed between these knives and passes upward on to the electrodes themselves. The electrodes last 200 hours, but the knives need renewing after about 20 hours and are regulated as they burn away. The furnaces are built of fire-brick about 3 ft. 3 in.×3 ft. 8 in. and 10 ft. high and contain two of these arcs in adjoining chambers. One furnace uses 400 kw., 200 in each arc; the two arcs being placed in series. The air which enters through the tuyere *T* is preheated in a set of pipes by the hot gases leaving the furnace. This preheating increases the efficiency of the furnace and lessens the danger of putting out the arc by the blast of air. The sudden cooling of the gases after leav-

ing the arc is effected by cold air which enters below each arc, *A*, and also in the passage *B* between the two arcs. If fresh air were used for this purpose the effect would be to dilute the nitric oxide in the resulting gas; so to avoid this, some of the gases from the furnace, after being cooled, are returned and used for the cooling currents already referred to. The amount of air used, apart from the cooling gases, is about 10 cu. m. per minute, corresponding to 25 liters per minute for each kilowatt.

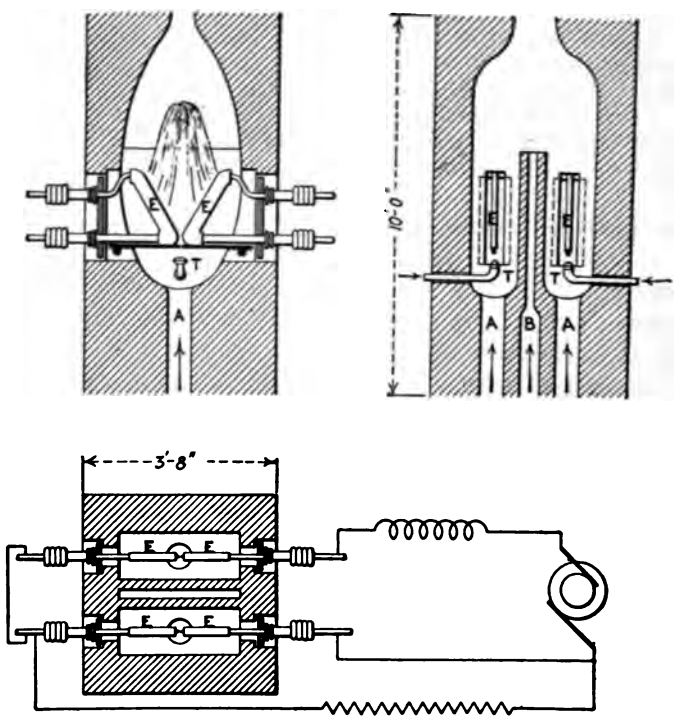

FIG. 140.—Pauling furnace.

The gases from the Pauling furnace contain from 1.15 to 1.50 per cent. of nitric oxide; they leave the furnace at 900° C. to 1,000° C. and pass first through the preheater where some of their heat is used for heating the incoming air; they then pass through a cooling tower filled with brickwork. When the bricks have become heated the gases are diverted to another tower while the first is being cooled by a current of cold air drawn through it by means of a chimney. After leaving the cooling tower the gases enter a large

tower of reinforced concrete, known as the oxidation tower, where the nitrous oxide combines with oxygen to form nitrogen peroxide. They then pass through a number of absorption towers for the production of nitric acid, and finally they are led through some "nitrite towers" where the residual gases are absorbed by a solution of sodium carbonate. The inventors guarantee a production of 60 grm. of pure acid per kilowatt hour, which corresponds to a little more than 500 kg. per kilowatt year. The plant is stated to cost not more than $24 per kilowatt.

The first plant on the Pauling system was erected at Patsch, near Innsbruck in the Tyrol, where 24 furnaces are operated with 15,000 h.p. Two other plants have since been erected, one at La Roche-de-Rame in France, and one in Italy; each of these uses 10,000 h.p.

In the plant at Patsch there are 24 furnaces, of 400 kw. each, and in the French plant there are nine furnaces of 600 kw. each.

REFERENCES TO THE PAULING PROCESS

F. Russ, "The Innsbruck Plant for Nitric Acid from Air," Electrochem. and Met. Ind., vol. vii, 1909, p. 430.

J. Zenneck, Met. and Chem. Eng., vol. ix, 1911, p. 73.

E. Lamy, Met. and Chem. Eng., vol. ix, 1911, p. 102.

J. Vanderpol, Met. and Chem. Eng., vol. ix, 1911, p. 196.

E. K. Scott, "The Manufacture of Nitrates from the Atmosphere," Jour. Roy. Soc. Arts., lx, 1912, p. 656.

The Schönherr Furnace.—In this furnace, which was invented by Dr. Schönherr, and is operated by the Badische Analin and Soda Fabrik, a long electric arc is formed passing along the axis of an iron tube. The arc extends from an insulated electrode at one end of the tube and passes to the wall of the tube near the other end. The arc is maintained in this position by a whirling current of air passing up the tube, and this air becomes heated and forms nitric oxide. The upper end of the tube, where the arc strikes, being water-cooled, serves also for the rapid cooling of the air which has passed through the arc, and most of the energy supplied to the furnace is ultimately wasted in heating this water. In the apparatus, as shown in Fig. 141, it will be seen that the air enters the furnace near the lower end and passes up and down before entering the central tube which contains the arc; in this way it is preheated to a certain extent by the waste heat of the issuing gases, and also serves to prevent the over-heating of the central iron pipe. The whirling motion is given to the air by the direction of the holes through

which it enters the central pipe at its lower end. The arc strikes in the first place between the electrode and the lower end of the pipe, it is immediately carried up the pipe by the current of air, and remains in a steady condition in the axis of this pipe. The arc so produced, in the case of a 600-h.p. furnace, is about 16 ft. long. A 1,000-h.p. arc is as much as 23 ft. or even 26 ft. long. The voltage used is 4,000 or 5,000 volts. The gas produced by this process contains as much as 2 per cent. of nitric oxide, and after cooling the nitrous gases are absorbed by milk of lime with the formation of calcic nitrate and nitrite, which are utilized for fertilizing purposes.

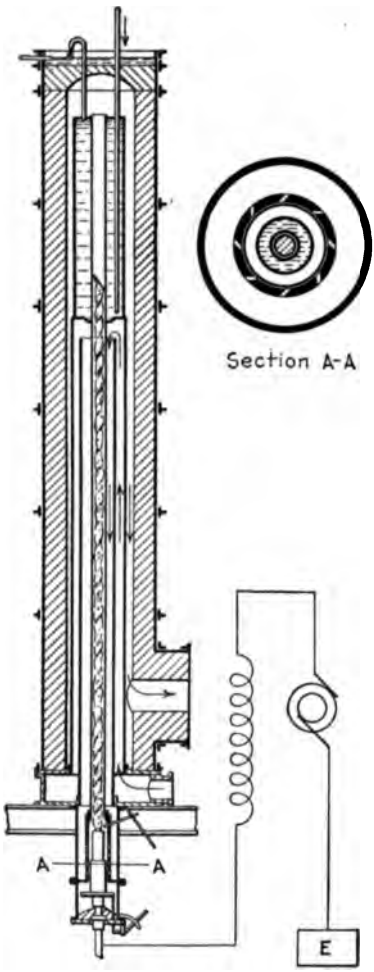

FIG. 141.—Schönherr furnace.

REFERENCES TO THE SCHONHERR PROCESS

Dr. Schönherr, "The Manufacture of Air-saltpeter by the Process of the Badische Analin and Soda-Fabrik." Trans. Am. Electrochem. Soc., vol. xvi, 1909, p. 131.

J. Zenneck, Met. and Chem. Eng., vol. ix, 1911, p. 73.

E. Lamy, Met. and Chem. Eng., vol. ix, 1911, p. 101.

E. K. Scott, *loc. cit.*, p. 648.

Calcium Cyanamide.[1] — This compound, $CaCN_2$, which has been described under "Uses of Calcium Carbide" in Chapter XI, may be referred to at this place as another product of the fixation of atmospheric nitrogen. It is formed by heating calcium carbide in nitrogen in an iron retort to a temperature of about 1,000° C. and is thus indirectly a product of the electric furnace. It is employed as a fertilizer to furnish nitrogen to the soil.

[1] E. Lamy, "The Industrial Fixation of Atmospheric Nitrogen," Abstract in Met. and Chem. Engineering, ix, 1911, p. 99.

Fused Quartz.—Silica, the oxide of silicon, is a valuable refractory material for lining metallurgical furnaces, and its use for this purpose has been described in Chapter IV. Although very refractory, silica or quartz can be fused, and it then possesses valuable properties, and has been used for some time in the construction of scientific apparatus. As an example, the well-known quartz filaments of C. V. Boys may be mentioned. These are made by melting the quartz in the oxyhydrogen blow-pipe. Recently it has been found possible to fuse quartz in the electric furnace and to make tubes, crucibles, dishes and other articles out of the fused quartz. This material scarcely expands at all when heated,

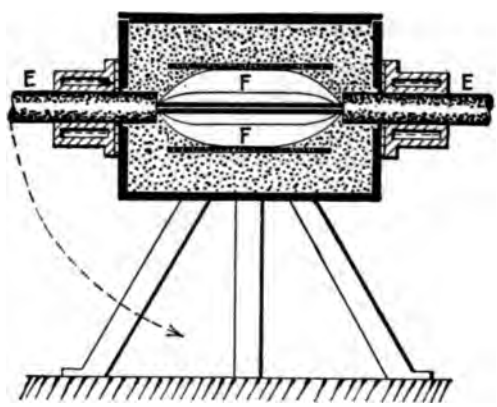

FIG. 142.—Furnace for fusing silica.

its coefficient of expansion being only one-twentieth of that of glass. In consequence of this it is possible to plunge a red-hot article made of fused quartz into cold water without cracking it. Fused quartz is a transparent glass, but "Electroquartz" or silica melted in the electric furnace has a milky white color.[1]

Fig. 142 shows an electric furnace for the manufacture of this material by the process of Bottomly and Paget.[2] The furnace consists of an iron box mounted on trunnions, and provided with electrode holders at the ends. Between the electrodes, *EE*, is supported a graphite rod of smaller diameter which serves as the resistor. Around this rod the box is filled with silicious sand; the lid being removed for this purpose. The sand is very pure (from

[1] Electrochemical and Metallurgical Industry, vol. iv, pp. 369 and 502; vol. v, pp. 67 and 107.

[2] A. Pohl, Zeit. für angewandte Chemie, vol. xxxvi, 1912, p. 1845.

99.6 per cent. to 99.8 per cent. silica) and the grains are very fine and of uniform size. A current of 1,000 amperes at 15 volts is passed through the rod; heating the surrounding sand to a temperature of 1,700° or 1,750° C., at which it melts. The tube of fused silica, *FF*, made in this manner does not adhere to the graphite rod, but is distended, as shown in the figure, by carbon monoxide resulting from the reaction of the carbon of the rod with a little of the silica. A tube formed in this way is usually rough on the outside, due to adherent sand, and to prevent this a graphite tube can be imbedded in the sand, as shown in the figure, so that the silica tube will be formed in contact with its inner surface.

If the box were kept in a horizontal position, the silica tube would be irregular in cross-section, due to its own weight, and to avoid this the whole furnace can be rotated until the axis is vertical.

When it is judged that the tube of fused silica is sufficiently thick, the current is cut off, the box rapidly opened, the pasty tube of silica from which the graphite rod has been removed is seized by one end in a suitable holder, the other end being closed, and blown by compressed air into the desired form. The temperature of the tube falls considerably during this manipulation, but the silica can be blown as long as it remains above 1,500° C. The true melting-point of silica has been given as 1,630° C., but it does not become really liquid until about 1,750°, and there is a considerable range of temperature below 1,630° in which the "fused silica" remains pasty. Articles of fused quartz or fused silica are chiefly valuable on account of their refractory qualities—being far more refractory than glass—and on account of their freedom from expansion when heated. The following figures are of interest in this connection:

COEFFICIENT OF LINEAR EXPANSION

Quartz (along principal axis)	0.000,007,81
Rock crystal (across principal axis)	0.000,014,19
Fused quartz	0.000,000,59
Glass	0.000,008,83
Porcelain	0.000,003,14

Glass.—Although glass can easily be melted in furnaces fired by gas, the cleanliness and convenience of electrical heating have led to its use in the manufacture of glass, and a large number of furnaces have been devised for this purpose. In these furnaces the glass-forming materials are usually heated and melted by means of electric arcs, but resistance heating is sometimes employed.

Trouble has been experienced in regard to the contamination and discoloration of the glass with the particles from the electrodes.

Alundum.—This is an artificial corundum or emery made by fusing bauxite in an electric furnace, and allowing it to cool slowly, thus forming a hard and tough crystalline mass which is broken up and used as an abrasive. The process was invented by C. B. Jacobs,[1] and the material is manufactured at Niagara Falls by the Norton Company.[2]

Bauxite is a hydrated form of alumina and contains silica, iron, titanium, etc., as impurities. It is prepared by calcining in a rotary kiln to expel the combined water. Bauxite is a very refractory material, melting at about 2,000° C. and it could not be melted commercially without the aid of the electric furnace.

A small amount (5 per cent.) of carbon may be added in order to reduce to the metallic state the iron, silicon and titanium contained in the bauxite; thus leaving the alundum as nearly pure fused alumina. The reduced metals are in nodules and can be separated mechanically from the product.

The resulting alundum becomes crystalline during its slow cooling and is crushed and sized for use as an abrasive.

When it is desired to cement these grains into a wheel or other article for grinding purposes, they are first roasted, in order to oxidize any metallic particles or carbide, and are then mixed with about 1 per cent. of fire-clay, wetted, pressed into shape and fired.

Another process consists in melting a pure form of bauxite in an electric furnace with graphite electrodes (instead of carbon electrodes) so as to avoid, as far as possible, any reducing action and any formation of aluminium carbide. The crushed product is roasted in order to destroy any carbide, and the particles are graded and molded with a bond of equal parts of ball-clay and feldspar, using one part of the bond to four parts of the alundum grains.

An electric furnace suitable for the manufacture of alundum has been patented by A. C. Higgins.[3]

This furnace, shown in Fig. 143, consists of an iron shell *S*, provided with an external water-cooling system, and fitting into a ring *R* which forms part of the base of the furnace. Two electric arcs (operated in series) are maintained between the vertical elec-

[1] C. B. Jacobs, U. S. patent 659,926, Electrochemical Industry, vol. iii, 1905, p. 406.

[2] Electrochemical Industry, vol. i, 1902, p. 15.

[3] A. C. Higgins, U. S. patent 775,654, Electrochem. Ind., iii, p. 30.

trodes, *EE*, and the molten alundum *A*. A hood, *H*, placed over the furnace serves to confine the dust and gases, which are led away by a flue, *F;* an opening for charging being also provided. In starting the furnace, electric arcs are established between the electrodes and the carbon lining of the furnace bottom; calcined bauxite is then fed in around the arcs and melts, ultimately carrying the

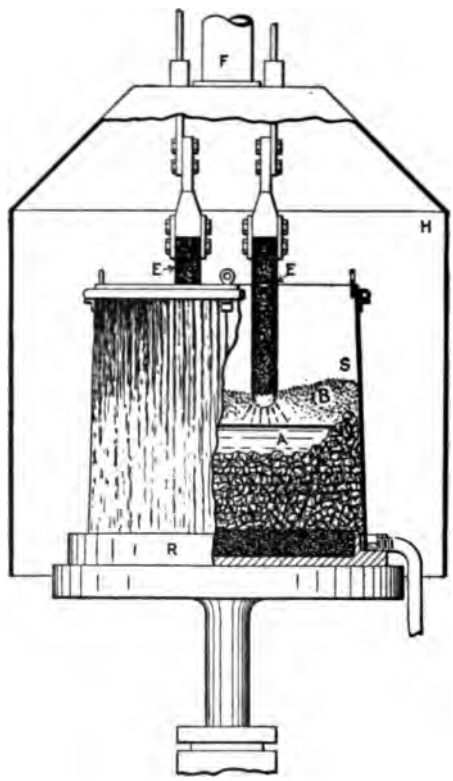

FIG. 143.—Alundum furnace.

electric current between the two arcs. As the amount of fused alundum increases the electrodes would need raising, but in this case the same purpose is served by lowering the furnace which is supported on a hydraulic ram. As the furnace fills up, the lower part of the alundum solidifies, as shown in the drawing. When the furnace is full, the shell with its contents can be lifted from the base, *R*, and another shell placed in position ready for a fresh charge.

The shell is somewhat conical to permit the easy removal of the solidified alundum.

The furnace described above is employed by the Norton Company for the manufacture of alundum. The crucible is 4 ft. in diameter and 5 ft. high, and the electrodes are each 4 in. by 12 in. in cross-section. The ingot formed weighs about 2.5 tons.[1] Mr. Higgins has invented a larger furnace,[2] of similar design which has four electrodes.

The production of alundum in the year 1911 was about 5,000 tons.

Phosphorus.—This is obtained by heating phosphoric acid with carbon, or bone-ash or mineral phosphates with carbon and silica. In this way the phosphorus is liberated from the compound containing it, and is distilled and condensed outside the furnace. As this operation must be carried on in the absence of air, the electric furnace is particularly suitable, and has practically replaced all others.

The old method of making phosphorus consisted in heating bone-ash (calcium phosphate) with sulphuric acid, thus obtaining phosphoric acid or calcium metaphosphate. This was mixed with charcoal and heated in clay retorts, phosphorus being liberated as a vapor and condensed under water.

Bone-ash or natural calcium phosphate can be smelted directly (without the sulphuric-acid treatment) to yield phosphorus, if silica is added to combine with the lime, as well as charcoal to reduce the oxide of phosphorus, but this process could not be carried out until the introduction of the electric furnace, as the temperature required was higher than could conveniently be obtained in a retort. At the present time, bone-ash, or the minerals rock-phosphate, apatite, or wavelite, are mixed with silica and charcoal, and heated in an electric furnace, yielding phosphorus vapor, carbon monoxide and a liquid slag of calcium silicate. In some cases, however, the sulphuric acid process is still employed as a preparatory step.

A suitable electric furnace is that invented by G. C. Landis,[3] and shown in Fig. 144. It consists of an iron box lined with vitrified bricks and having an inner lining of carbon blocks which form one electrode; the other electrode, *E*, being vertical. The charge of phosphate, carbon and silica is introduced by means of the hopper *H* and inclined tube *I*. The phosphorus vapor and accompanying

[1] Mineral Industry, vol. xx, 1911, p. 31.

[2] Electrochem. and Metall. Ind., vii, 1909, p. 223.

[3] G. C. Landis, U. S. patent 842,090, 1907, assigned to American Phosphorus Co. Electrochem. and Metall. Ind., v, 1907, p. 55.

gases pass out by the pipe *O* to suitable condensers, and the fused slag is tapped out below. The furnace is made gas-tight with the aid of water-seals for the cover and for the gland admitting the electrode; the latter being insulated from the furnace body at the point *F*. The vitrified bricks lining the furnace are laid in a non-absorbent mortar such as a mixture of silicate of soda and powdered asbestos; this being intended to prevent absorption of the phosphorus. The carbon lining is composed of two layers of blocks, so that the inner set of blocks can be replaced, when worn away, without dis-

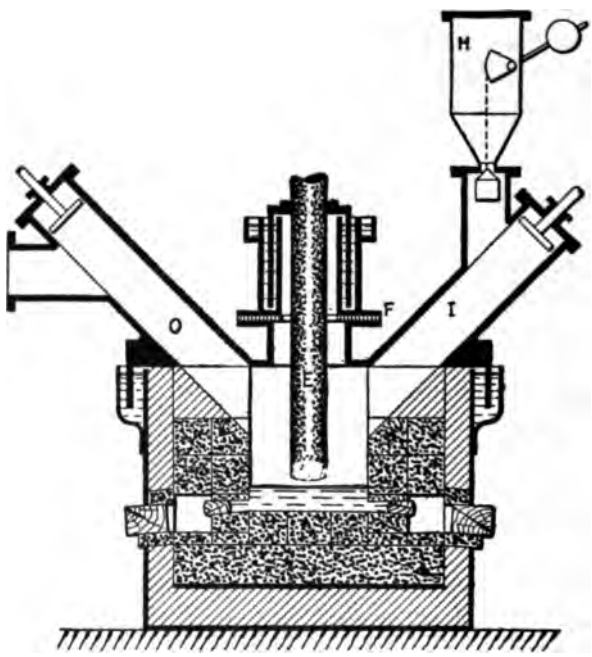

FIG. 144.—Phosphorus furnace.

turbing the outer layer. The inner tapping hole for the molten slag is plugged with a piece of wood, without any luting; an outer plug, which is luted, prevents access of air to the inner wooden plug. Two sets of tapping holes are provided so that one set can be used when the other has become worn out.

About 80 per cent. or 90 per cent. of the phosphorus in the rock is extracted by this process, and the yield has been stated as 3.3 lb. of phosphorus per horse-power day. The output of phosphorus in

1906 has been estimated at from 1,000 tons to 3,000 tons; the price ranging from 45 cents to 70 cents per pound.[1]

Carbon Bisulphide.—This important compound of carbon and sulphur is made by passing sulphur vapor over red-hot charcoal.

Until recently the reaction was effected in retorts of iron or clay heated externally by a coal fire, but now it is made largely, if not entirely, in electric furnaces.

A furnace for this purpose was invented by Mr. E. R. Taylor,[2] of Penn Yan, N. Y., who thus revolutionized this industry in the United States. This furnace, shown in Fig. 145 is somewhat complicated in design, but consists generally of a heating chamber provided with four horizontal carbon electrodes and surmounted by a tall shaft containing the charcoal, *C*, to be treated. This shaft has double walls, and the annular space between them is filled, through the hopper, *JJ*, with sulphur which continually melts with the heat of the furnace, and runs down into the heating chamber.

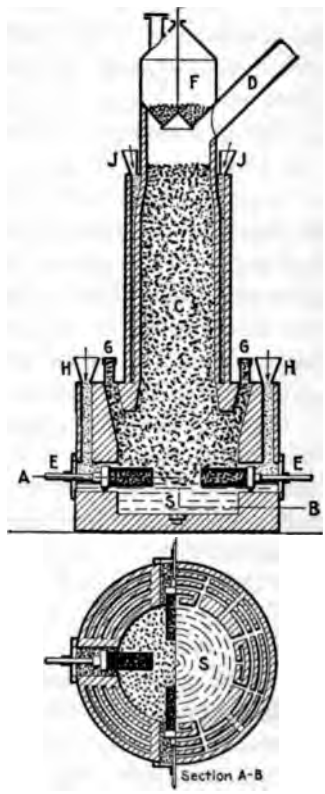

FIG. 145.—Carbon bisulphide furnace.

Sulphur is also introduced through four hoppers, *H H*, one above each electrode holder, *E E*, and through other hoppers supplying the annular chambers shown in the plan. This sulphur also is melted by heat that would otherwise be wasted, and flows into the heating chamber. When the furnace is in regular operation, molten sulphur lies in the bottom, at *S*, and vaporizes,

[1]G. W. Stose. "The Production of Phosphate Rock and Phosphorus in 1906." U. S. Geol. Survey; Abstract in Electrochem. and Metall. Ind., v, 1907, p. 407.

[2]E. R. Taylor, U. S. patent 706, 128, 1902. Electrochem. Ind., i, 1902, pp. 60, 63, and 76. "The Manufacture of Bisulphide of Carbon in the Electric Furnace," Trans. Am. Electrochem Soc., i, 1902, p. 115. "Making Bisulphide of Carbon in an Electric Furnace." The Electrical Age, New York, October, 1902. Jour. Franklin Inst., Feb., 1908, p. 141. "The Manufacture of Carbon Bisulphide." Jour. Indust. and Eng. Chem., iv, Aug., 1912.

passing up through the heated charcoal which lies between and above the electrodes. The general temperature must be low in comparison with that in most electric furnaces. Sulphur melts at 115° C. and boils at 445° C., so that the molten sulphur must be at intermediate temperatures, while the charcoal itself will be decidedly hotter, say 800° or 1,000° C. in the middle of the heating chamber.

The formation of carbon bisulphide according to the equation

$$C+S_2=CS_2$$

is stated to take place at a red heat and less completely at a bright red heat. It seems probable that the charcoal in the vicinity of the electrodes may be above the temperature that is most suitable for the reaction, but as the sulphur vapor passes up the shaft, it will meet charcoal at lower temperatures, and will be largely, if not entirely, converted into carbon bisulphide.

Charcoal contains about 3 per cent. of ash which cannot take part in the above reaction, and must remain in the furnace. This ash may become fused in the hottest zone between the electrodes, but owing to the low temperature of the molten sulphur the ash must solidify and cannot be tapped molten from the furnace. It will therefore be left in the furnace, and is cleaned out about once a year, by which time several tons must have accumulated.[1]

The furnace is 41 ft. high and 16 ft. in diameter, built of iron so as to be gas-tight, and lined with brickwork to retain the heat. It is operated with two-phase current of about 4,000 amperes at from 40 to 60 volts. This is supplied directly from two generators of 330 kw. each, run by water-power supplemented by steam-power. Each electrode is 20 in. square and 48 in. long, and is composed of 25 rods of carbon, each 4 in. square. Above each electrode is an opening, *G*, through which broken carbon is fed. This serves as a resistor to carry the current between the electrodes, as charcoal itself is a very poor conductor, and it also protects the electrodes, which are found to last for at least a year. The output was stated in 1908 to be 14,000 lb. per day, but Mr. Taylor has recently informed the author[2] that he has made carbon bisul-

[1] Mr. Taylor states that 1,500,000 lb. to 2,000,000 lb. of CS_2 have been made in a furnace without cleaning out; these figures would correspond to 7,000 lb. and 10,000 lb. of charcoal ash.

[2] E. R. Taylor, Letter of Nov. 2, 1912. The author is indebted to Mr. Taylor for some of the information contained in this account.

phide in this furnace at the rate of 17,000 lb. per 24 hours, using 4,000 amperes at 50 to 80 volts, and that he is now constructing a furnace 56 ft. high and 18 ft. in diameter, which will be capable of a still greater output.

Carbon bisulphide is a clear colorless liquid which is very volatile and has an unpleasant smell. Its vapor is more than twice as heavy as air, and as it is also poisonous, carbon bisulphide is used in large quantities for killing rats, mice, gophers and other vermin. Bisulphide of carbon is largely used in the arts as a solvent for oil, gutta percha, etc., and has recently been employed in making artificial silk from the fiber of spruce wood.

Monox.—This is an electric-furnace product, discovered by Dr. Potter,[1] containing silicon monoxide, SiO, together with amorphous silicon and silica.

When silica is heated with carbon in an electric furnace, the first product of reduction is apparently silicon monoxide.

$$SiO_2 + C = CO + SiO$$

At the temperature of the furnace, silicon monoxide is a gas and tends to escape, but if kept in by the superincumbent charge, it is further reduced to silicon which condenses and collects in the molten state as in the silicon furnace.

$$SiO + C = Si + CO$$

If there is little charge above the zone of reaction, the silicon monoxide escapes with the carbon monoxide, and burns with a brilliant flame yielding clouds of silica. If, however, the gases are allowed to escape into a large container free from air and preferably under reduced pressure, they do not burn, and the silicon monoxide and other vapors condense in the form of a fine brown powder which has been termed "monox."

"Monox" has been shown to consist largely of silicon monoxide, but it also contains amorphous silicon and silica. It is extremely light, a cubic foot of the loose powder weighing only 2.5 lb., although its true density is 2.24, that is 140 lb. per cubic foot.

Monox burns easily, without flame, when fresh, but after standing it becomes more inert owing to a superficial oxidation of the particles.

[1] Dr. H. N. Potter, Trans. Am. Electrochem. Soc., xii, 1907; "Silicon Monoxide," p. 191; "Monox," p. 215. "The Production of Monox a New Electric-furnace Product," p. 223.

Monox possesses many interesting and useful properties and in particular has been found to make a very good paint, when mixed with oil. It can also be employed as an ingredient of printers' ink, as it improves the "laying" property of the ink.

A furnace used by Dr. Potter for the production of monox is shown diagrammatically in Fig. 146,[1] and consists of a cylindrical cast-iron drum 4 ft. in diameter, lined with 7 in. of fire-brick, and provided with two horizontal electrodes. The electrodes, which

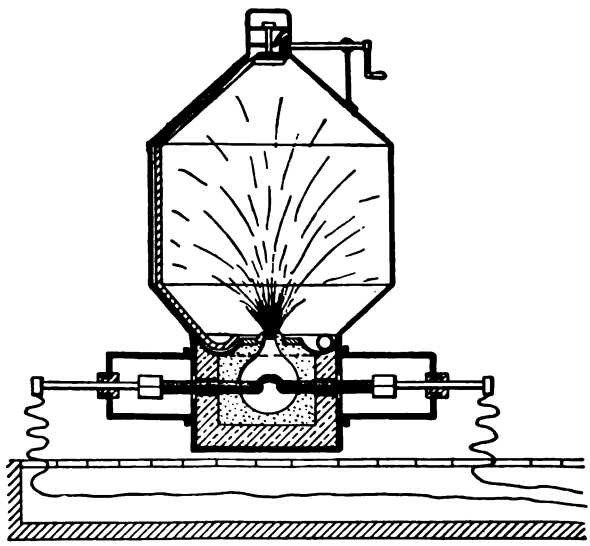

FIG. 146.—Monox furnace.

are 4 in. square, are made of carbon or Acheson graphite and are provided with water-cooled electrode holders. As the furnace must be air-tight, these holders are contained in cast-iron terminal boxes, which are bolted to the drum. A screw and nut mechanism, not shown in the figure, serves to advance the electrodes when necessary, and electrical connection is made by a stout copper tube sliding through an insulated stuffing box.

The charge is a mixture of sand and coke or carborundum, and fills the drum to at least 12 in. above the electrodes. It is covered with fire-bricks except in the center where a graphite ring having a

[1] Reproduced from Fig. 1 in Dr. H. N. Potter's paper, "The Production of Monox," *loc. cit.*

7-in. opening is placed. Part of the charge is dug away, so that the gases shall blow out through the ring.

Above the furnace is attached an iron cylinder, 7 ft. in diameter with conical ends, which is connected to a pump for maintaining a partial vacuum. The cylinder is cooled externally by water and contains mechanical scrapers for collecting the monox which condenses on the inner surface.

Tubular rubber gaskets are employed for making air-tight joints between different parts of the apparatus and for rendering air-tight the doors which afford access to the terminal boxes. Water under pressure is supplied to the gaskets, expanding them until a tight joint is obtained, and cooling the gasket and adjacent parts.

The furnace was operated by an alternator specially designed for supplying a constant amount of power to the electric arc without the need of any regulating devices.

In spite of the successful work that was done in the production and utilization of monox, the author learns from Dr. Potter that its manufacture was discontinued, for financial reasons, in the year 1907. With regard to the composition of monox, Dr. Potter considers that silicon monoxide dissociates during cooling into silicon and silica,

$$2SiO = Si + SiO_2,$$

just as carbon monoxide dissociates into carbon and carbon monoxide,

$$2CO = C + CO_2.$$

If quickly cooled, as in the production of monox, the dissociation only proceeds to a small extent, and the product consists largely of SiO. The amount of SiO actually present cannot be determined by analysis, but there is evidence of the presence of this compound in the product monox.

CHAPTER XIV

ELECTROLYSIS AND ELECTROLYTIC PROCESSES

ELECTROLYSIS

When an unidirectional or continuous electric current flows through a fused salt, or a solution of a salt in water, the salt, or the water, is broken up by the current into two parts. One of these parts is hydrogen, or a metal, which is liberated at the cathode or electrode through which the current leaves the liquid, while the remainder of the salt, or of the water, is liberated at the anode or electrode by which the current enters the liquid. Thus:

$2NaCl$ (electrolyzed) $= 2Na$ (at cathode) $+ Cl_2$ (at anode). That is to say, when fused common salt is electrolyzed, sodium is set free at the cathode and chlorine at the anode.

$CuSO_4$ (in aqueous solution) $= Cu$ (at cathode) $+ SO_4$ (at anode). That is to say, the electrolysis of a solution of copper sulphate in water liberates copper at the cathode while SO_4 is set free at the anode. The final result of the operation will depend, however, upon the nature of the anode. If this is of platinum, or carbon, and is not attacked by the SO_4, the latter will react with the water of the solution and will form sulphuric acid and oxygen, thus:

$$2SO_4 + 2H_2O = 2H_2SO_4 + O_2.$$

and the end products of the electrolysis will be copper at the cathode, oxygen at the anode and sulphuric acid in the solution. If, however, the anode were made of copper or some other metal that would be acted on by the SO_4, this reaction would take place:

$$Cu + SO_4 = CuSO_4.$$

The copper sulphate solution would thus be regenerated, no oxygen would be liberated, and the only result of the operation would be a transfer of copper from the anode to the cathode.

The latter case is exemplified in the electrolytic refining of copper, the anode consisting of impure copper, which constantly dissolves under the action of the current, while pure copper is deposited on the

cathode. When it is desired to extract a metal from the fused salt or solution in which it is contained, the anode should, if possible, be insoluble in whatever is set free at its surface; or, if this is impossible, it should be inexpensive, as it will be dissolved in proportion as the other metal is recovered.

In the equation given above for the electrolysis of fused common salt, chlorine and sodium are the end products. An aqueous solution could not be used for the production of sodium, as the water would react with the sodium, forming caustic soda and hydrogen.

In the electrolysis of a fused mixture of two salts or of a solution of a salt in water, the current breaks up the compound which is the least stable; thus in a solution of copper sulphate in water, the current separates the copper sulphate into its components, and not the water; but in a solution of aluminium sulphate, the water and not the aluminium salt is decomposed. It is necessary, therefore, to employ a solvent that is more stable than the salt it is desired to decompose, or, failing this, to use the pure salt in a state of fusion. This is why the extraction of aluminium from its ore is carried out in a fused mixture of fluorides instead of in an aqueous solution.

In the electrolysis of solutions a definite amount of electricity in passing through the solution will always produce a definite amount of decomposition. This amount is always the same for the same solution, and in different solutions chemically equivalent amounts of decomposition are effected. A current of 1 ampere flowing through acidulated water for 1 second will liberate 0.0104 mg. of hydrogen, and in any other solution the weight of the metal liberated will be 0.0104 mg., multiplied by the atomic weight of the metal and divided by the valency of the metal in the particular solution. Thus, the amount of the monovalent metal sodium that would be set free per second would be 0.0104 mg.$\times$23, the atomic weight of sodium, or 0.239 mg.; while the weight of copper deposited would be 0.0104 mg.$\times$63.2, the atomic weight of copper, or 0.657 mg. in cuprous salts, such as Cu_2Cl_2, in which copper is monovalent, while in the more usual cupric salts, such as $CuSO_4$, in which the metal is divalent, only half that amount would be deposited by the current. The amount of metal actually obtained as the result of electrolysis is frequently less than the calculated weight on account of secondary reactions, such as the metal redissolving in the electrolyte, hydrogen being liberated instead of the metal, leakage of the current, etc., and the ratio of the metal

actually deposited to the theoretical quantity is known as the current efficiency, as it shows what proportion of the current is effective in liberating the metal.

The electrical energy required to produce a definite weight of a metal, by the electrolysis of a chemical compound of the metal, depends not only on the number of ampere hours needed to liberate the weight of metal, but also on the voltage maintained during the operation; that is on the electrical pressure needed to drive the electric current through the electrolyte so as to produce the decomposition. Each solution has a definite electrical pressure which must be exceeded before electrolysis will take place, and the working voltage must be decidedly above the minimum in order to drive a rapid current of electricity through the solution. The passage of the current also produces heat, the amount being proportional to the square of the current and to the resistance of the electrolytic cell, while, as has been noted, the amount of metal deposited is proportional to the current alone. As the chemical work performed is proportional to the current, and the heat generated to the square of the current, the efficiency will be greater as the current is smaller. In electrolysis at furnace temperatures, however, it is often convenient to heat the electrolyte electrically instead of by the external application of fuel heat, and in such cases the production of heat by the current cannot be regarded as waste.

The nature of the anode has a great effect upon the voltage needed for electrolysis. Thus, in electrolyzing a solution of copper sulphate with an anode that does not dissolve, copper and oxygen will be liberated, the electric current will have to do the work of separating these elements, and a pressure of more than one volt will be needed; but if the anode is made of copper, the metal will be removed from the anode as fast as it is deposited on the cathode, no chemical work will be done, and the smallest voltage will suffice to produce electrolysis.

It is possible to calculate, from available data, the amount of energy needed to separate a definite weight of a compound into its elements, and the relation of this to the electrical energy actually required to produce this decomposition is the energy efficiency of the process.

When an anhydrous salt or mixture of salts is used as an electrolyte it must be heated, usually to a red heat, to render it fluid, and its electrolysis may be classed as a furnace operation.

TABLE XXIV.—ELECTROCHEMICAL EQUIVALENTS

Element	Atomic weight (O = 16)	Nature of electrolyte	Symbol and valency	Amount deposited by 1 ampere	
				Mg. per sec.	Lbs. per hour
Aluminium	27.1	Oxides and salts	Al. III	0.0936	0.000743
Antimony	120.20	Sulpho-salts	Sb. III	0.4152	0.003295
Arsenic	74.96	Arsenites	As. III	0.2589	0.002055
Barium	137.37	Haloid salts	Ba II	0.7118	0.005649
Bismuth	208.0	Bismuth salts	Bi. III	0.7185	0.005703
Bromine	79.92	Bromides	Br. I	0.8282	0.006573
Cadmium	112.40	Salts	Cd. II	0.5824	0.004622
Calcium	40.09	Haloid salts	Ca. II	0.2077	0.001648
Chlorine	35.46	Chlorides	Cl. I	0.3675	0.002917
Chromium	52.0	Chromic salts	Cr. III	0.1796	0.001425
Cobalt	58.97	Cobaltous salts	Co. II	0.3055	0.002425
Copper	63.57	Cuprous salts	Cu. I	0.6587	0.005228
Copper	63.57	Cupric salt	Cu. II	0.3294	0.002614
Fluorine	19.0	Fluorides	F. I	0.1969	0.001563
Gold	197.20	Haloid salts	Au. III	0.6812	0.005406
Hydrogen	1.008	Aqueous solutions.	H. I	0.0104	0.000082
Iodine	126.92	Iodides	I. I	1.3150	0.010437
Iron	55.85	Ferrous salts	Fe. II	0.2894	0.002297
Iron	55.85	Ferric salts	Fe III	0.1929	0.001531
Lead	207.10	Salts	Pb. II	1.0730	0.008516
Lithium	7.00	Haloid salts	Li. I	0.0725	0.000575
Magnesium	24.32	Haloid salts	Mg. II	0.1260	0.001000
Manganese	54.93	Manganous salts	Mn. II	0.2846	0.002259
Mercury	200.0	Mercurous salts	Hg. I	2.0725	0.016450
Mercury	200.0	Mercuric salts	Hg. II	1.0363	0.008224
Nickel	58.68	Nickelous salts	Ni. II	0.3040	0.002413
Oxygen	16.00	Oxides	O. II	0.0829	0.000658
Platinum	195.0	Haloid salts	Pt. IV	0.5052	0.004010
Potassium	39.10	Salts	K. I	0.4052	0.003216
Silver	107.88	Salts	Ag. I	1.1179	0.008873
Sodium	23.00	Salts	Na. I	0.2383	0.001891
Strontium	87.62	Haloid salts	Sr. II	0.4540	0.003603
Sulphur	32.07	Sulphides	S. II	0.1662	0.001319
Tin	119.0	Stannous salts	Sn. II	0.6166	0.004894
Tin	119.0	Stannic salts	Sn. IV	0.3083	0.002447
Zinc	65.37	Salts	Zn. II	0.3387	0.002688

ELECTROLYTIC EXTRACTION PROCESSES

Electrolytic processes may be divided into two classes according as they are intended for the recovery of a metal or other element from its compound or for purifying a metal which has already been obtained.

Many examples of both classes might be quoted, where the electrolysis is carried out in aqueous solutions, but the electrolysis of anhydrous electrolytes is almost entirely directed to the separation of a chemical compound into its constituents, as in the extraction of aluminium from alumina, or chlorine and sodium from common salt.

The Acker Process for Caustic Soda and Chlorine.—In this process fused common salt or sodium chloride is electrolyzed, using carbon anodes by which the current enters the liquid, and molten lead for the cathode by which the current leaves. The salt is broken up into chlorine, which is liberated at the anode and is led away and used for making bleaching powder, and sodium, which is liberated at the cathode and forms an alloy with the lead. The lead containing the sodium is then treated with steam, which combines with the sodium to form caustic soda.

The following reactions take place:

$2NaCl$ (electrolyzed) $= Cl_2$ (liberated at the anode) $+ 2Na$ (alloying with the lead cathode).

$2Na$ (alloyed with the lead) $+ 2H_2O$ (the jet of steam) $= 2NaOH + H_2$.

The ingenious arrangement by which this is accomplished is illustrated in Fig. 147. The apparatus consists of an irregular shaped cast-iron vessel, about 5 ft. long, which is divided into three compartments, *A*, *B*, and *C*, with the connecting channel, *R*. The larger compartment, *A*, contains melted salt, *S*, resting on a thin layer of molten lead which is caused to circulate as shown by the arrows. Four electrodes, *E*, of graphitized carbon are immersed in the fused salt and form the anode of the electrolytic cell, being connected to the positive cable from a dynamo. The iron tank is connected at the point *H* to the negative cable, thus making the molten lead, the cathode. The electric current passes from the carbon electrodes through the melted salt to the fused lead on which the salt rests. In passing through the salt, chlorine is liberated at the carbon electrodes and escapes, being drawn away by a fan, while the sodium is liberated at the surface of the lead and alloys with it. In the small compartment, *B*, a jet of steam in-

troduced by the pipe, *F*, serves to blow the lead up the vertical pipe, *P*, and over into the third compartment, *C*, from which the lead returns by the passage, *R*, to the first compartment. The lead entering *B* is charged with sodium, and when it meets the steam in the pipe, *P*, the sodium combines with the steam, forming anhydrous caustic soda, which floats on the lead in *C* and overflows by the spout, *D*, and hydrogen, which escapes at *D* and burns. The compartment *A* is lined, above the level of the lead, with magnesite-bricks, *M*, and the cover is formed of fire-brick tiles, *T*. The salt to be used in the process is warmed on the top of the furnace and then introduced through charging holes in the roof. Each anode consists of a block of graphitized carbon 14 in. long, 7.5 in. wide, and 3 in. thick, which is supported by two 5-in. carbon rods passing through the top of the furnace. The carbon blocks are lowered

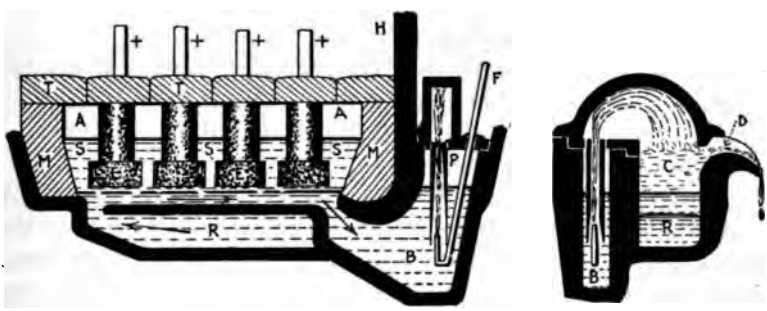

FIG. 147.—Acker furnace for caustic soda.

until within 3/4 in. of the molten lead. The current used is 8,200 amperes, the voltage of each furnace or pot being only 6 or 7. From 40 to 45 pots are used at once, being connected in series, so that the same current passes through them all, and the total voltage necessary is 275; about 3,000 h.p. being supplied at the generating station, which is 1,500 ft. away. The current density at the anodes is about 2,750 amperes per square foot, and this is sufficient to keep the salt at a temperature of 850° C., which is a bright red heat, and 75° C. above the melting-point of the salt, while it is far above the melting-point of lead. The cast-iron vessel which forms the furnace is set in brickwork which reduces the loss of heat by radiation and conduction. The output of each furnace is 25 lb. of caustic per hour, which is 93 per cent. of the amount which should theoretically be produced by the current, but the voltage is considerably higher than is required by theory, as nearly half of

the energy of the current is needed to keep the furnace at the high temperature of fused salt. The caustic soda in *C* is fused and practically anhydrous, so that it is ready for market without any boiling down, such as is required when aqueous solutions are used for electrolysis. The Acker process has been described by C. E. Acker in the Transactions of the American Electrochemical Society, vol. i, 1902, and by Prof. Richards, Electrochemical Industry, vol. i, 1902, p. 54.

The Castner Sodium Process.—This is the standard method of making that metal, thousands of tons per annum being made in this manner. In this process, fused anhydrous caustic soda is electrolyzed, using nickel for the anode, and carbon, or some metal such as iron, for the cathode. The products of the operation are sodium and hydrogen at the cathode, and oxygen at the anode, all in equal atomic proportions.

The following reactions probably take place:—

$2NaOH$ (electrolyzed) $= 2Na$ (at cathode) $+ 2HO$ (at anode).

$4HO$ (at anode) $= 2H_2O + O_2$.

$2H_2O$ (electrolyzed) $= 2H_2$ (at cathode) $+ O_2$ (at anode).

Or, put into one equation:—

$2NaOH$ (electrolyzed) $= [Na_2 + H_2]$ (at cathode) $+ O_2$ (at anode).

As the sodium is lighter than the fused caustic, it floats to the top, and great difficulty is experienced in preventing it from burning in the air or in the oxygen liberated at the anode, which also rises to the surface. In the Castner apparatus, Fig. 148, this is accomplished by the metal cylinder *E*, from the lower edge of which a cylinder of nickel gauze is continued down between the nickel anode *C* and the cathode *D*. The sodium rises within this cylinder and collects at *F*, from which it may be ladled, or may overflow through a spout, while the oxygen rises outside the gauze cylinder, and is, therefore, unable to attack the sodium. The hydrogen rises with the sodium inside the cylinder and escapes through the holes in the cover. The use of the gauze cylinder allows the anode and cathode to be brought very close to each other, being only 1 in. apart, without danger of the sodium meeting the oxygen, and in this way the resistance of the apparatus is kept low, and a high electrical efficiency can be obtained.

The apparatus consists of a cast-iron pot *A*, set in brick work, *B*, and heated if necessary by a ring of gas burners, *H*, to a temperature very little above the melting-point of the caustic soda. The cathode, *D*, is supported in position and insulated from the

iron pot by means of the tube, *G*, which, being closed at the bottom by a ring of insulating material, such as porcelain, is filled with the fused caustic soda, which is then allowed to solidify. The tube is kept a little cooler than the rest of the apparatus, and the caustic in *G*, therefore, remains solid, and supports and insulates the cathode. It is very important that the fused caustic should not be heated far above its melting-point, because the sodium would then rapidly redissolve in it. The caustic melts at about 300° C., and should be kept not more than 10° above this; 90 per cent. of the theoretical

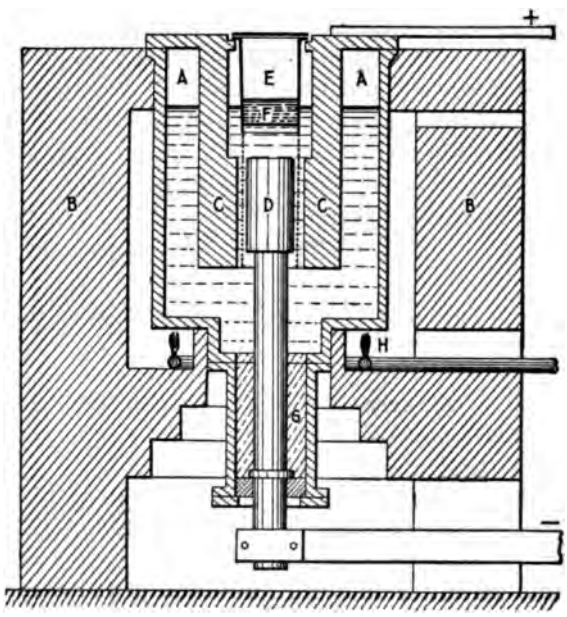

FIG. 148.—Castner sodium furnace.

quantity of sodium being then obtained. If heated 20° above its melting-point no sodium would be produced, as it would dissolve as rapidly as it formed. A pot 18 in. in diameter and 2 ft. deep will hold 250 lb. of melted caustic, and takes a current of 1,200 amperes at five volts. The current density is 2,000 amperes per square foot at the cathode and 1,500 at the anode. At the Niagara Electrochemical Company's plant in 1902[1] there were 120 such pots, employing, in all, 1,000 h.p., and producing "at an assumed efficiency of 90 per cent.," about 25 lb. each per day, or 3,000 lb.

[1] Richards, Electrochem. Ind., vol. i, 1902, p. 15.

for the whole plant. The consumption of power was about 8 h.p.-hours per pound of sodium.

Of the total annual production of sodium, about 1,500 tons are used for cyanide making, 1,500 tons for making sodium peroxide, and 500 tons are sold in the metallic state.

The Ashcroft Sodium Process.[1]—This is an attempt to produce sodium from common salt instead of from the more expensive caustic soda. Common salt has so high a fusing temperature that it cannot be electrolyzed directly for the metal sodium, as this would be volatilized. In the Acker process sodium is produced, but only as an alloy with molten lead, from which it is recovered as caustic soda. The Ashcroft process, illustrated in Fig. 149, consists in electrolyzing fused salt in a tank, *A*, using lead as the cathode to retain the resulting sodium, and then carrying the sodium lead alloy to a second tank, *B*, where it becomes the anode, in a bath of fused caustic soda kept just above its melting-point. In this tank metallic sodium is liberated at the cathode, *C*, and floating upward is caught within the hood *D*, and overflows through the pipe *E*.

The reactions that take place can be made clear by the following equations:

In A—$2NaCl$ (electrolyzed) $= Cl_2$ (liberated at the anode) $+ 2Na$ (dissolving in the lead cathode) ..... (1)

In B—$NaOH$ (electrolyzed) $= HO$ (at anode) $+ Na$ (liberated at the cathode) ..... (2)

Na (in lead alloy) $+ HO = NaOH$ ..... (3)

In *A*, with an insoluble anode, the salt, which forms the electrolyte, is broken up into chlorine and sodium. In *B*, the caustic soda electrolyte is re-formed by reaction (3) as fast as it is destroyed by reaction (2).

The products of the first tank are chlorine, which is piped away and utilized, and sodium as an alloy with lead; while common salt is consumed. The second tank yields sodium only, which it takes from the lead alloy. The fused caustic, which serves as electrolyte, is not destroyed, but merely serves as a carrier for the sodium. The electric current will liberate twice as much sodium as in the Castner process, because only sodium is set free at the cathode,

[1] Ashcroft, Trans. Am. Electrochem. Soc., vol. ix, 1906, p. 123; Electrochem. and Met. Ind., vol. iv, 1906, p. 218.

while in the older process equal equivalents of sodium and hydrogen were set free.

As the tank *A* must be hot enough to fuse salt, that is nearly 800° C., while the tank *B* is little more than 300° C., the lead sodium alloy must be cooled during its passage from *A* to *B*, and the lead returning from *B* to *A* must be reheated. This is accomplished by a twin pipe *P* of considerable length connecting the two vessels, so that the alloy flowing from *A* to *B* gives up its heat to the lead flowing from *B* to *A*. The pipe is folded on itself for compactness, only a part being shown in the drawing. The method of producing

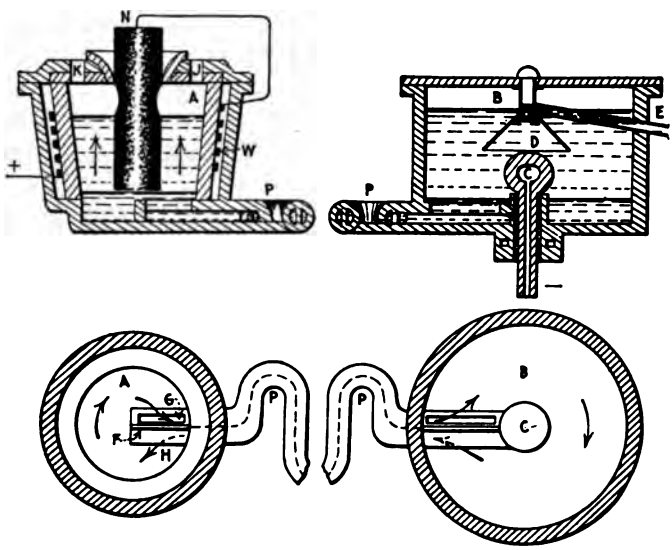

FIG. 149.—Ashcroft sodium furnace.

a continuous circulation of the lead is also very ingenious, and consists in producing electro-magnetically, a rotation of the lead alloy in *A*, and in providing a suitable baffle *F*, and openings *G* and *H* in the end of the twin pipe which enters *A*, so that the rotating alloy is forced to pass from *A* to *B*, circulate in *B*, and after giving up its sodium return to *A*. The openings at both ends of the twin pipe are so arranged that the richest of the alloy in *A* is skimmed off and is conducted to *B*, where it passes to the surface, and so gives up its sodium before returning to *A*. The rotation of the metal is shown by arrows in the figure. The rotation in *A* is caused by a coil of wire *W* within the cast-iron tank, but separated from

the molten salt by the lining of magnesite or similar material. The whole current used in the process passes through this coil and produces a strong magnetic field within *A*, the lines of magnetic force pointing upward as shown by the arrows. After leaving the coil the current passes to the carbon anode *N*, and then through the fused salt to the molten lead. The anode being small and central, and the lead cathode being more extended, the direction of the current though mainly vertical, will be partly horizontal, and so will cut the lines of magnetic force. The result will be horizontal rotation of the molten contents of *A*, and, as has been stated, this leads to the desired circulation of lead from *A* to *B* and back again. The tanks *A* and *B* are made of cast-iron, and heated externally by fuel as well as internally by the passage of the current. *A* is provided with two openings, *J* and *K*, one of which has a hopper for charging in the salt, while the other serves to remove the chlorine. In *B*, the cathode *C* is globular in form, allowing the sodium which deposits around it to pass easily upward into the hood *D*. The cathode is insulated from the bottom by a layer of solidified caustic as in the Castner apparatus, and is hollow, thus allowing of cooling by air or other fluids if the temperature becomes too high. The hood *D* is connected to the iron cover of *B*, and thus with the sodium-lead anode, so that there is no tendency for sodium to form on any part of the tank except the cathode *C*. The method for producing a circulation of the lead does not sound very efficient, but it is stated to work well in a furnace using some 2,000 or 3,000 amperes, and the whole operation is reported to be working satisfactorily. The voltage needed will be about 7 volts in *A*, that is, the same as in the Acker process, and about 2 volts in *B*, or, in all, 9 volts. The process should show marked economies in comparison with the Castner method.

Carrier Sodium Process.—Another attempt to obtain metallic sodium by the electrolysis of fused common salt has been made by C. F. Carrier,[1] who has designed a furnace which is similar in principle to the Ashcroft furnace, but somewhat different in design.

The furnace, Fig. 150, consists of a cast-iron pan set in masonry and divided into two compartments, an anode compartment, *A*, and a cathode compartment, *C*. The pan contains molten lead, *L*, which serves as a carrier for the sodium between the anode and cathode compartments. The lead is caused to circulate through

[1] C. F. Carrier, Jr., "Metallic Sodium from Fused Sodium Chloride," Met. and Chem. Eng., viii, 1910, p. 253.

a passage *P* by means of a screw propeller. The anode compartment, *A*, contains fused sodium chloride. The anode is made of graphite and is protected by an earthenware sleeve. The electric current, passing through this compartment, electrolyzes the sodium chloride, liberating sodium which alloys with the molten lead, and chlorine which escapes through the openings *F*. The lead containing the sodium passes by the action of the propeller through the cathode compartment, *C*, where it serves as anode. The electric current, passing from the lead in this compartment to the iron cathode *B*, causes the sodium in the molten lead to dissolve in the electrolyte

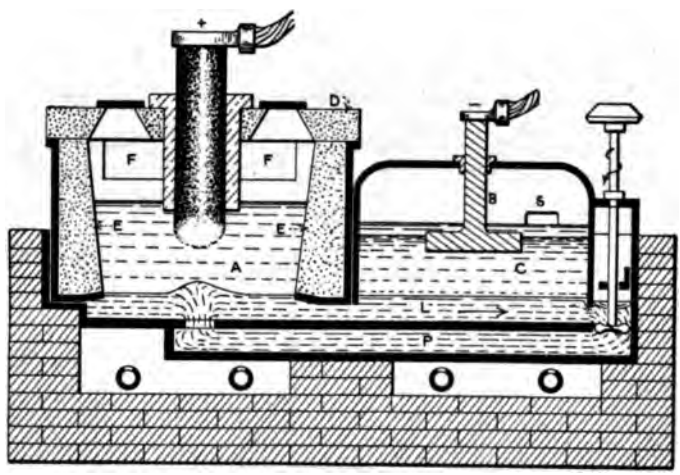

FIG. 150.—Carrier sodium furnace.

and to redeposit on the cathode, from which it passes in a molten condition and overflows by a spout *S*. The cathode is insulated from the iron casing of this compartment. The lining *E* and cover *D* of the anode compartment are made of fire-brick. The spaces in the masonry under the pan contain gas burners which help to keep the electrolyte in a state of fusion.

In the anode compartment the electrolyte consists at first of a mixture of three molecules of sodium chloride, three molecules of potassium chloride and two molecules of calcium chloride; a mixture which is far more fusible than sodium chloride and yields almost pure sodium at the cathode. Sodium chloride alone is added after the start. The electric current passing through this compartment liberates chlorine at the anode and sodium at the

cathode where it alloys with the molten lead. In the cathode compartment fused caustic soda was at first employed, as in Ashcroft's apparatus, but this was found to yield no sodium. Apparently the sodium became oxidized and dissolved in the fused caustic which was at a temperature between 700° C. and 900° C. and not entirely protected from the air. It will be remembered that in the Ashcroft apparatus, in which sodium is obtained in a similar manner, the caustic soda is kept at little more than 300° C. An electrolyte of sodium and potassium chlorides was then tried instead of the caustic soda and was found to yield sodium satisfactorily.

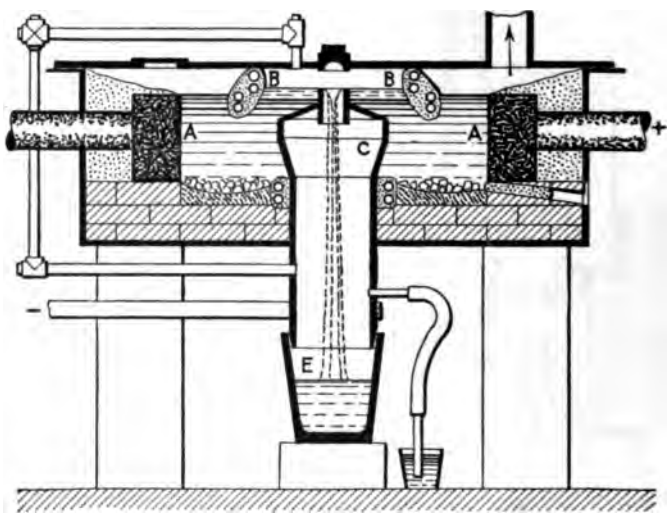

FIG. 151.—Virginia Company's sodium furnace.

In the anode compartment the graphite anode had an effective area of 43 sq. in., the molten lead cathode had an area of 242 sq. in., and a current of 600 to 700 amperes was used. The current in the cathode compartment was reduced to about 75 per cent. of that in the anode compartment (to allow for inefficiency in that compartment) so that, as more sodium would thus be supplied to the lead in the anode compartment than would leave it in the cathode compartment, the lead would never become entirely free from sodium. Six to 8 volts were needed for the furnace, but the experiments were not continued long enough to determine the yield of sodium, which was liable to become oxidized during its removal from the furnace. In starting

the operation the gas burners were not sufficient to melt the mixed chlorides and this was done by means of carbon resistor-rods which were driven into the face of the anode and carried the current from that to the molten lead cathode. These rods became very hot and melted the salt which was piled around them; the rods were then broken off and electrolysis took place through the fused salt.

Virginia Electrolytic Company's Sodium Furnace.[1]—In the year 1910 the Niagara Electrochemical Company, using the Castner process, and the Virginia Electrolytic Company were the only producers of sodium in the United States. The latter company produce sodium by the electrolysis of fused sodium chloride in the furnace shown in Fig. 151. The furnace is circular, containing an annular graphite anode, *AA*, and hollow iron cathode C. Electrolysis of the fused salt yields sodium, which rises within the water-cooled curtain, *BB*, and chlorine which collects outside this curtain and passes out by the pipe *D*. The sodium flows down through *C* and collects in *E*, from which it is tapped at intervals. The largest furnace constructed uses a current of 10,000 amperes.

Potassium.—The alkali metal potassium strongly resembles sodium, and is obtained by electrolysis of its fused salts in substantially the same manner.

Magnesium.—This metal is well known on account of its property of burning with a very bright flame, which is made use of for photography. It has a specific gravity of 1.74, melts at 750° C. and can be rolled into sheets or ribbons. It has a very strong affinity for oxygen, burning when ignited and gradually corroding away if exposed to the air at the ordinary temperature. The oxide MgO and carbonate $MgCO_3$ are well known and abundant; the oxide being of great value as a refractory material for lining electric furnaces.

The metal is obtained by electrolysis of the fused chloride, having been first isolated in this manner by Bunsen about the year 1852. This process has been carried out recently in the laboratory by Prof. S. A. Tucker,[2] using a fused mixture of magnesium chloride and potassium chloride in a graphite crucible.

The charge consisted of:

203 parts of crystallized magnesium chloride, $MgCl_2,6H_2O$
74 parts of potassium chloride, KCl,
50 parts of sublimed ammonium chloride, NH_4Cl.

[1] Mineral Industry, vol. xix, 1910, p. 614.

[2] Prof. S. A. Tucker and Mr. F. A. Jouard, "The Electrolytic Preparation of Magnesium," Trans. Am. Electrochem. Soc., vol. xvii, 1910, p. 249.

That is, a mixture of these chlorides in molecular proportions. The ammonium chloride is added to prevent the decomposition of the magnesium chloride (with loss of hydrochloric acid), during the preliminary fusion.

The apparatus consists of a graphite crucible, Fig. 152, 2.75 in. in diameter and 3.5 in. high, surrounded by magnesia, *M*, to retain the heat as far as possible. The crucible stands on a block of graphite, *B*, into which is threaded a rod of copper. The crucible is made the cathode, and a graphite electrode, *A*, 1.25 in. in diameter, forms the anode. The operation is started by fusing the mixed salts in a platinum dish, during which operation the water of

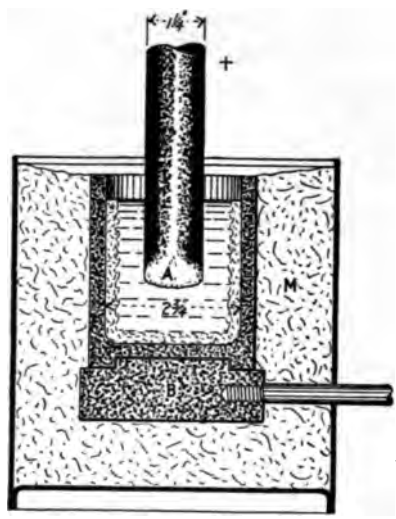

FIG. 152.—Tucker magnesium furnace.

crystallization and the ammonium chloride are eliminated, and pouring the melted chlorides into the graphite crucible, which should be hot, to prevent the salts chilling and stopping the operation. Chlorine is given off at the anode and magnesium forms at the cathode. At a low temperature, about 450° C., the metal forms in a sponge and can be removed and melted together under a flux of calcium fluoride and the electrolyte. At a higher temperature, about 700° C., the metal melts and floats to the surface where it probably unites with the liberated chlorine. It is therefore preferable to maintain a low temperature. A current of 150 amperes at 30 volts is suitable for this apparatus.

The operation can also be carried out in a Muthmann crucible,[1] Fig. 153, which consists of a copper tube, 1.25 in. in diameter and 4 in. long, spun to a cone for part of its length, *BD*, and provided with a water-jacket. The cathode, *C*, is a rod of carbon or graphite, about 3/4 in. in diameter, wrapped in asbestos paper between *D* and *E*, which makes a tight, non-conducting joint between it and the copper tube. The anode, *A*, is supported above in an adjustable holder. In using this crucible for the electrolysis of a fused salt, the salt solidifies around the sides and bottom of the crucible, thus

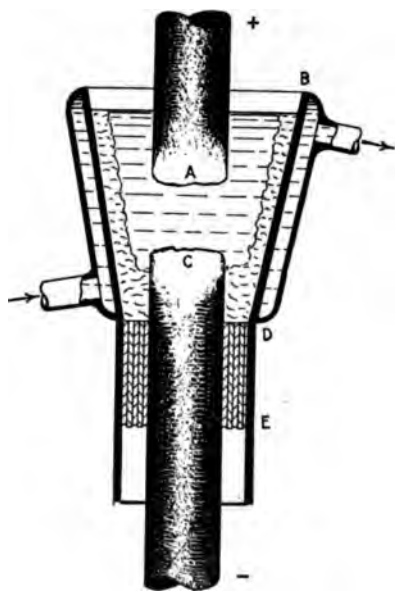

FIG. 153.—Muthmann crucible.

producing a lining of the same material as the molten contents. The latter being kept molten by the electric current used for electrolysis.

Calcium.—This metal, which until recently was quite rare in the metallic form, although lime, the oxide of calcium, is so common, is obtained by the electrolysis of its fused chloride. It has also been produced by heating calcium carbide to a very high temperature in the electric furnace. The carbide dissociates, yielding calcium vapor which can be condensed. Calcium is less violent in its

[1] Muthmann Crucible, S. A. Tucker, Trans. Am. Electrochem. Soc., xvii, 1910, p. 256.

reactions than sodium and will form a valuable reducing reagent in certain metallurgical operations. When calcium is added to molten steel, it is said to remove very completely not only the oxygen, but also any nitrogen that may be contained in the steel, forming a nitride of calcium. Another compound, calcium hydride, is formed by heating calcium in an atmosphere of hydrogen. It is called "hydrolith" (hydrogen stone), because, when placed in water, it liberates a large quantity of hydrogen. The hydrogen is supplied in part by the calcium, which reacts with water, forming lime and hydrogen, and in part from the hydrogen contained in the calcium hydride, as shown in the equation:

$$CaH_2 + 2H_2O = CaH_2O_2 + 2H_2.$$

One kilogram of the hydrolith is found to yield as much as one cubic meter of hydrogen, so that it should be very valuable for inflating balloons and for other purposes.

Barium and **Strontium,** like calcium, are obtained by electrolysis of the fused chloride.

Zinc.—The electrolysis of fused zinc chloride is easily carried out using a carbon anode and a zinc cathode. According to the temperature of the apparatus, the cathode and deposited metal may be solid,[1] or they may be molten as in the furnace shown in Fig. 22. In the former case a current of 100 or 200 amperes per square foot of cathode needed an E.M.F. of 3 or 4 volts; chlorine, which is the other product of the electrolysis, can be piped away and utilized.

The electrolysis of zinc chloride forms a part of several processes for the recovery of zinc from its ores, and one of these may now be described.

The Swinburne and Ashcroft chlorine smelting process is a method for the treatment of mixed sulphide ores such as those of zinc and lead.

The ore, consisting of sulphides of lead, zinc, iron, and manganese, with some silver, is decomposed by the action of dry chlorine at a temperature of 600° C., or 700° C., in a special vessel called a transformer, forming a fused mixture of chlorides of the metals. The sulphur comes off in the free state, and can be condensed and saved, while the earthy matter or gangue, from the ore, remains suspended in the fused chlorides. Enough heat is produced by the reaction to keep the transformer at the right temperature, which can be regulated by passing the chlorine more or less rapidly. When

[1] W. Borchers, "Electric Smelting and Refining," 1897, p. 313.

the vessel is full of chlorides they are tapped out, leaving enough behind to serve as a molten bath into which more ore can be charged, and through which the chlorine can be passed. The molten chlorides are treated with lead, which serves to remove the silver, and with zinc to remove the lead. The remaining chlorides are dissolved in water, separated from the gangue by filtration, and the iron and manganese precipitated chemically by the addition of chlorine and zinc oxide, leaving a solution of zinc chloride only. This solution is evaporated, and then fused and electrolyzed in a furnace shown in outline in Fig. 22. The products are molten zinc, which is tapped off at intervals, and chlorine, which is compressed and used again for the treatment of fresh quantities of ore. The process is one of great interest, and is applicable to very many complex ores which are difficult to treat by other methods. It is self-contained, and does not require any expensive reagents, as the chlorine for the transformer is produced in the electrolysis of the zinc chloride, but the operations are somewhat complicated, and would need very careful attention. At present the only commercial installation is at a plant of the Castner-Kellner Co., which has a supply of chlorine from other processes, and uses it for the treatment of complex ores as described above, but omits the final electrolysis, obtaining the zinc in the form of chloride. Accounts of this process can be found in the "Electrochemical Industry," vol. i, p. 412; vol. ii, p. 404; vol, iii. p. 63. the transactions of the Institution of Mining and Metallurgy for 1901, and the Mineral Industry, vols. x and xi.

Aluminium.—This is the most important metal that is produced solely in the electric furnace. Originally it was obtained by complicated chemical methods involving the use of metallic sodium as a reducing agent, but the electrical method, mentioned in Chapter I, entirely supplanted the older processes. The common metals—iron, copper, lead, tin, zinc, etc.—occur in their ores as oxides, or can easily be converted into oxides by a roasting operation, and these oxides are readily reduced to the metallic state by the action of carbon in an ordinary furnace, because, at such temperatures, oxygen has a greater affinity for carbon than it has for the metal. Other metals, however, such as aluminium, calcium, and sodium, have a greater affinity for oxygen than those already mentioned, and it is very difficult, and in some cases impossible, to reduce the oxides of these metals by means of carbon at ordinary furnace temperatures. With the aid of electricity, however,

any metal can be reduced, either by heating the oxide to a very high temperature, at which the affinity between the metal and oxygen is lessened, so that the latter can be removed by means of carbon, or by dissolving the oxide or other ore of the metal in a suitable solvent, and applying an electrical force to tear the compound into two parts by electrolysis, thus liberating the metal. Aluminium, calcium, and other metals can be reduced by carbon at the high temperature of the electric furnace, but immediately combine with a further quantity of carbon, forming carbides. It is, therefore, necessary, when the pure metal is desired, to employ electrolysis instead of the direct reduction with carbon.

Aluminium has been termed "Silver from Clay" as it forms some 15 or 20 per cent. of ordinary clay, but the expense of extracting aluminium from clay would be so great that the richer ore, bauxite, is always employed as a source of this metal. Bauxite consists of alumina, the oxide of aluminium, combined with some water and associated with silica, oxide of iron, etc. If the natural bauxite were merely calcined to remove the water and then electrolyzed in the electric furnace, the iron and silicon would be reduced more readily than the aluminium. The resulting metal would therefore be impure and would be almost useless for most of the purposes to which aluminium is applied, though an impure metal, obtained in this way, would serve for the production of high temperatures by Dr. Goldschmidt's Thermit process. For the production of the pure metal the bauxite must be purified before being introduced into the electrolytic furnace. One method for effecting this is to digest the calcined bauxite in a solution of caustic soda, thus dissolving the alumina which is subsequently precipitated from the solution. A more recent process, that of Hall, consists in mixing the calcined bauxite with a sufficient proportion of carbon or aluminium to reduce the whole of the impurities to the metallic state. The mixture is then charged into a carbon-lined electric furnace and melted. The iron, silicon and other impurities are reduced to the metallic state and collect at the bottom of the melted mass, leaving a pure fused alumina suitable for use in the electrolytic furnace.

The production of aluminium from alumina is effected by electrolysis as described in outline in Chapter I; Fig. 154[1] represents diagrammatically a furnace used by the Pittsburg Reduction Com-

[1] From a drawing by Prof. J. W. Richards in the Journal of the Franklin Institute, May, 1896.

pany. The furnace consists of an iron casing, *B*, thickly lined with carbon, *D*, and containing the fused electrolyte, *C*, and aluminium, *A*. A number of electrodes of specially pure carbon, *E E*, form the anode, while the carbon lining, *D*, and aluminium, *A*, form the cathode of the furnace. The carbon lining is very thick, thus reducing the loss of heat, and is provided with a sump for holding the aluminium when it is formed. A tapping hole and spout, leading from this sump, are also provided though not shown in the figure. The electrolyte consists of alumina dissolved in the fluorides of sodium, aluminium, and calcium. The fluorides are not decomposed but merely serve as a solvent for the alumina. Electrolysis yields aluminium at the cathode and oxygen at the

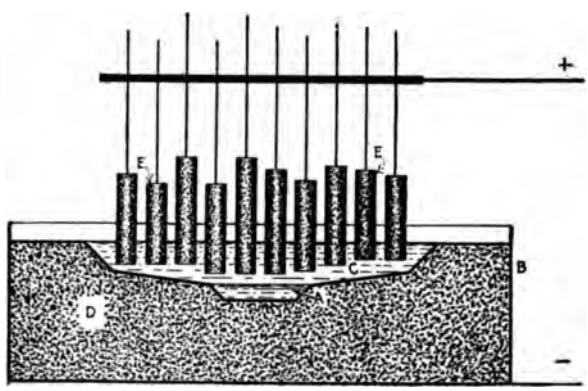

FIG. 154.—Aluminium furnace.

anode. The oxygen combines with the carbon of the anodes as shown in this equation:

$$Al_2O_3+3C=2Al+3CO.$$

Only a small proportion of alumina can be dissolved by the fluorides, without unduly raising the temperature of the furnace, but a quantity of alumina is placed on the top of the electrolyte and stirred in from time to time as required. It is desirable that the furnace should be worked at a low temperature and with a low current density, as a high temperature causes the deposited metal to dissolve again in the electrolyte, and a high current density decomposes the fluorides, liberating sodium and fluorine. The melting temperature of the most fusible mixture of cryolite, the natural fluoride of aluminium and sodium, and alumina has been

found to be 915° C.,[1] but it has been stated that in recent practice the aluminium furnace is worked at 750° C. or 800° C.

Recent accounts of the aluminium industry,[2] state that in one of the European works the pots are 8 ft. long, 4 ft. to 5 ft. wide, and 2 ft. high. The anodes are rectangular blocks of carbon 12 to 20 in. (square?) and 10 to 12 in. high; eight to twelve being hung in one pot. The weight of each anode is from 66 to 154 lb; the smaller sizes lasting from 100 to 140 hours, and producing 140 to 200 lb. of aluminium. The current density at the anode is about 650 to 750 amperes per square foot, amounting to 8,000 to 20,000 amperes per pot according to size, at an E.M.F. of 7 to 8 volts. The anodes are kept 2.5 or 3 in. from the molten aluminium cathode.

The electrolyte is stated in some cases to have the composition $Al_2F_6.6NaF.3CaF_2$. This bath has a melting-point of 800° C.–850° C., and is usually kept between 800° and 900° C. Additions of common salt lower the melting-point to 700° C., but the salt cannot be added regularly on account of its volatility. The amount of alumina in the bath varies from 10 to 20 per cent. The normal current efficiency is 90–95 per cent., giving an output of 460–600 lb. per kw. year, but in many works it is not over 60–65 per cent., or an output of 340 to 440 lb. per kw. year.[3]

The total production of aluminium during the year 1911 was nearly 45,000 tons.

The production of aluminium in the laboratory, using a current of 500 amperes, is described by Prof. H. K. Richardson.[4] He recommends a mixture of 85 per cent. cryolite and 15 per cent. alumina, and a current density of 19 amperes per square inch of the anode surface. The furnace used was 14 in. long, 7 in. wide, and 4 in. high inside. The E.M.F. varied from 6 to 17 volts, and the temperature was about 900°–1,000° C. The current efficiency obtained was about 60–70 per cent.

ELECTROLYTIC REFINING

In electrolytic refining the anode consists of the impure metal which is to be refined, the electrolyte contains some salt of this

[1] F. R. Pyne, Trans. Amer. Electrochem. Soc., vol. x, p. 63.

[2] Mineral Industry, vol. xx, 1911, p. 24.

[3] These figures are apparently based on an E.M.F. of about 10 volts per pot.

[4] H. K. Richardson, "Some Observations on Laboratory Production of Aluminium," Trans. Am. Electrochem. Soc., xix, 1911, p. 159.

metal in a state of solution or fusion and the refined metal is deposited, by the electric current, on the cathode.

It is well known that many metals can be refined in this manner, but it is not obvious why the electric current should always deposit the metal that we wish to purify, instead of any of the other metals with which it may be associated. Thus in refining copper, the anode contains copper, silver, gold, etc., and copper is deposited on the cathode, while in refining silver, an anode containing the same three metals yields a cathode of pure silver.

The nature of electrolytic refining and the reason why it is so generally applicable may be made clear by a hydraulic illustration.

Fig. 155 represents a trough, having two dams, *D* and *F*, and filled with a liquid flowing from left to right. Before reaching the first dam the liquid is impure, being contaminated by the presence of one or more heavier liquids, *H*, and one or more lighter liquids, *L*. The

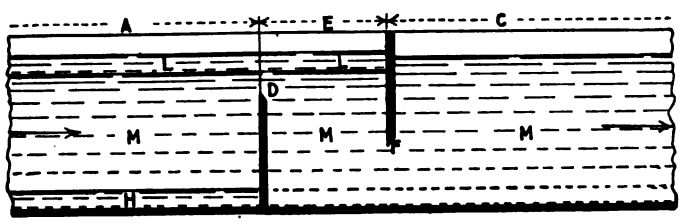

FIG. 155.—Electrolytic refining.

heavy liquids are stopped by the first dam, the light liquids are stopped by the second dam, and only the pure liquid, *M*, passes along the trough. The action of the apparatus depends on the difference in density of the mixed liquids, holding back first those which are denser and secondly those which are less dense than the liquid to be purified. Similarly, in electrolytic refining, advantage is taken of the greater or smaller solubility of the mixed metals in the electrolyte. Those that are less soluble are stopped at the first dam (the surface of the anode) and those which are more soluble pass into the electrolyte, with the metal to be refined, but are not deposited on the cathode. Referring to the figure, *A* is the anode containing metal *M* with less soluble metals *H*, and more soluble metals, *L*, and *D* is its dissolving surface. *E* is the electrolyte containing metal *M* and those that are more soluble, *L*. *C* is the cathode consisting only of metal, *M*, and *F* is its depositing surface at which the second stage of the purification takes place. It is obvious

that the electrolytic refining process, like its hydraulic analogue, depends on there being a great excess of the metal (or liquid) to be purified, and it is this excess of one metal in the anode (and electrolyte) that really determines which metal shall be obtained in the refining process. The illustration shows that impurities will tend to accumulate in the system until the apparatus may cease to operate and it also suggests that greater purity can be obtained if the flow of material is slow so that the liquids will not become mixed. That is to say if the electric current-density is small. The difference in hydraulic head between *A* and *C* represents roughly the E.M.F. of the system causing the flow, while the smaller difference of level between *A* and *C* when there is no flow might represent the small E.M.F. necessary to separate the metals from their combination in the anode.

The electrolytic refining of metals in aqueous solutions forms an important industry. It includes the refining of copper in a copper sulphate solution, of silver in silver nitrate, of gold in gold chloride, and lead in lead fluosilicate. Electrolytic refining in fused anhydrous salts is hardly employed at all; the only available example being the separation of lead from bismuth by electrolyzing the alloy in an electrolyte of fused lead chloride as devised by Borchers.[1] The method may find other applications such as the refining of aluminium in fused cryolite, but on account of the greater difficulty and expense of operating at high temperatures it would only be used in cases where aqueous electrolytes could not be employed.

[1] Dr. W. Borchers, "Electric Smelting and Refining," 1897 Ed., p. 340.

CHAPTER XV

FUTURE DEVELOPMENTS OF THE ELECTRIC FURNACE

In this concluding chapter, an attempt may be made to indicate in what directions future developments of the electric furnace may be expected, and to what extent this development is likely to proceed. On account, however, of the great changes that take place in the economic conditions of the world, and of the discoveries and improvements which are made with increasing frequency, our expectations may as easily prove to be too moderate as too sanguine.

The following questions may be asked:

1. How far will the electric current replace fuel in furnaces for the smelting and refining of metals?

2. What untouched fields of usefulness are waiting for the electric furnace?

3. What limits are there to the commercial development of the electric furnace?

Electric-furnace operations may be roughly divided into two classes, first, those which can scarcely be effected in any other way, and in which electrical heating must always hold the field, such as the production of calcium carbide, carborundum, and aluminium. Second, those in which either fuel or electrical heat may be used with a fair measure of efficiency, and in which the price of the two sources of heat must be compared, in addition to the efficiency of each, before deciding which to employ.

The relative prices of coal and electrical energy, and the amount of electrical power that will be available, are considerations of the first importance in determining the future of the electric furnace.

Until a few years ago electric power was a wonderful and expensive commodity, and the idea of using it for heating on a commercial scale was preposterous. About 13 tons of coal were needed to produce one electrical horse-power for a year, and this electrical energy would furnish less heat than one ton of the original coal. Such a method of using coal was evidently extremely wasteful. The greater efficiency of electrical heating somewhat reduces it

effective cost and this, together with the smaller cost of electrical energy when derived from water-power, has made it cheaper in some cases to use "white coal" instead of black, in the furnace.

In comparing the supplies and prices of coal and electrical energy, it should be remembered that one ton of good coal produces as much heat as 1.33 h.p. years of electrical energy, but that the efficiency of the electrical furnace is from 2 to 30 times as great as the efficiency of ordinary metallurgical furnaces, so that an electrical horse-power year will produce as much effective heat as several tons of coal. The figures for different operations are given in Chapter III, Table II.

The world's production of coal at the present time is about one thousand million tons a year, and is steadily increasing. The electric furnace draws its energy mainly from water-powers. The water-powers of the world that have already been utilized are very small in comparison with the present coal output, having in all only about 1 per cent. of the heating power of the latter.

In view of the fact that coal mining is a long-established industry, while the electrification of water-powers is only of recent growth, it is reasonable to suppose that the latter will increase more quickly than the former. In both cases there are limits, however; the coal mines will ultimately all be discovered and worked out to a depth at which the cost becomes almost prohibitive, while on the other hand the water-powers will all be developed, leaving only those that are too expensive to utilize. When these limits are reached the coal supply will have sunk to a small proportion of the amount needed for heating and power, but the water-powers will continue to give a steady supply of power for all time with only maintenance and interest charges.

The exhaustion of coal supplies may not be reached for hundreds or thousands of years, but if the development of the mines proceeds, as at present, at increasing rates, their practical depletion may be less distant than now appears probable. In any case it seems likely that as coal can only be used once, while water-power is continually replenished, the latter may be expected ultimately to largely replace the former for motive power and to some extent for furnace work.

The present age, especially on this continent, is one of the barbaric use of the mineral assets such as coal and ore. As the population increases and the development of mines is pushed to its limit, the increasing scarcity both of the ore and of the fuel to smelt

it will make it necessary to spend more money in utilizing these to the very best advantage, using the coal with the greatest economy and extracting every possible product from the ore. It has been suggested that the present enormous production of iron and steel, for example, can only represent a temporary condition, that of extracting the iron from its ore. When most of the iron-ores have been converted into iron or steel our descendants will have to be content to use over again the metal so produced, merely making good the deficiency caused by rusting and the increase in population. Iron is, however, a very plentiful metal, forming perhaps 4 or 5 per cent. of the earth's crust, and the supply of coal will last for a large number of years, but the time must come when it would be extravagant to use coal, mined at great expense, for the mere production of heat. As coal becomes more scarce it will be used for its chemical properties of reducing iron and other metals from their ores, while the necessary heat would be produced electrically. At that time dwellers in northern countries may have to heat their houses electrically, or if, on account of the large population at that time, such method of heating were too expensive, they may have to live underground during the winter.

In this connection it may be stated that the water-power at present developed in Canada amounts to 1,000,000 h.p.[1] and that the total available power in that country has been estimated at 17,000,000 h.p.[2] This would have a heating power equal to 13,000,000 tons of coal yearly, and, in view of the greater efficiency of electrical heating, it might replace three times that amount of coal if used for heating.

In the more immediate future there will no doubt be a great development of electrical power, which may in consequence replace coal to some extent in furnace operations such as the production of steel and iron from certain ores, and in certain localities; on the other hand the rapidly increasing market for electrical power will tend to keep the price from falling, relatively to the price of coal, and it is therefore unlikely that coal and coke will be at all largely replaced for smelting purposes by the electric current for many years to come.

When the possibilities of the electric furnace have been more fully ascertained it is likely that some large water-powers that are

[1] Report of Commission of Conservation of Water-powers of Canada, Ottawa, 1911.

[2] Estimate mentioned but not authorized by the Commission.

situated conveniently with regard to metallic ores may be utilized for their reduction, the electric plant being available for other purposes after the exhaustion of the ore supply. At the present time such a large return can be obtained from capital in Canadian industries that only the most easily developed water-powers are considered. When the country becomes more thickly settled and when capital is more abundant, a smaller return will be expected and the interest charges on permanent developments such as hydro-electric plants will be less; thus enabling powers to be utilized that would be too costly under present conditions.

With regard to the probable future developments of the electric furnace it will be instructive to review shortly the progress that has already been made:

I. The electric furnace has rendered available a range of temperature from 1,800° C. to about 3,600° C., which could not previously be reached, or in other words it has doubled the available range of temperatures above the freezing-point.

II. In the electric furnace substances can be heated to any temperature within this increased range with the complete exclusion of air or furnace gases; a condition that is very difficult and sometimes impossible to attain with other furnaces. This feature of the electric furnace has enabled it to be used for the production of substances like zinc, phosphorus and carbon bisulphide.

III. Electric furnaces are more efficient than fuel-fired furnaces —particularly at high temperatures—and in view of this, electrical energy, though costing more than an equivalent amount of fuel, has replaced fuel economically for a number of purposes.

IV. The electrolytic furnace enables a direct electric tension to be applied to break up compounds that cannot be dealt with by the ordinary chemical reactions at high temperatures.

The increased range of temperature that is now available has resulted in a complete new chemistry of high temperatures. At these temperatures all metals are reduced from their oxides by carbon, and many of them unite with more carbon to form carbides, some of which have valuable properties. Other compounds such as silicides and borides have also been obtained and studied. No doubt in the future many other compounds will be obtained, from the elements silicon, carbon, calcium, oxygen, and aluminium, which form such a large proportion of the earth's crust, as the work that has already been done in this direction can only be considered to have scratched lightly in the virgin soil that has been

placed at our disposal. Counting in the other elements, it will be seen what an immense field for discovery lies open to those who are working with the electric furnace. Another power furnished by the electric furnace is the ability to separate and purify substances by fractional distillation at these high temperatures. What could formerly be done by the chemist in the separation of organic liquids by distillation in glass vessels can now be effected in the electric furnace in the case of such bodies as iron, lime and silica, not to mention the more fusible metals such as gold and silver. The removal by distillation in the electric furnace of impurities from anthracite, during its conversion into graphite, is one commercial example of a process which will no doubt be largely employed in the future.

The high temperatures that can be obtained, together with the ease with which air can be excluded, and the high efficiency even at high temperatures, has made it economical to smelt electrically such metals as chromium, manganese, tungsten, titanium, and the element silicon, whose reduction had been difficult, expensive, and incomplete in ordinary furnaces. Other elements will, no doubt, be added to this list, and a large number of alloys and compounds of these will certainly be discovered.

The electrolytic furnace has already enabled aluminium, sodium, potassium, magnesium, calcium, barium, strontium, and other metals to be obtained from their fused salts, together with chlorine and other substances. Although most of the ordinary metals that are amenable to this treatment must have been experimented with already, there are no doubt many new processes of this character waiting to be discovered, and it seems likely that a far greater use can be made of the alkali and alkaline earth metals that have been made available in quantity by this means.

The very high temperature of the electric furnace has enabled it to be used for melting refractory metals and still more refractory substances such as silica, lime, magnesia and alumina. The possibility of fusing these substances in quantity will lead to fresh uses of these and other materials. The conversion of amorphous carbon into graphite is an example of a physical change in an elementary substance at a high temperature, that may not soon be duplicated, though the problem of its conversion into the diamond is still unsolved commercially.

One very important use of the electric furnace is for experimental work in the laboratory. Here the item of cost is not a matter of

great importance as the operations are usually small and occasional. The results of such experimental work are frequently very important and far reaching. For such purposes the electric furnace will be increasingly employed, and standard forms will be devised for heating substances, and carrying out reactions with the complete absence of oxygen, carbon, or other objectionable substance.

In order to carry out chemical reactions and physical changes of all kinds it is essential that the pressure as well as the temperature of the system shall be under complete control. The possibilities for obtaining these conditions that are offered by the electric furnace are beginning to be realized. They have already been utilized in such processes as the synthesis of ammonia; vacuum and pressure furnaces have been constructed and employed for various purposes, and a wide field for future development is offered at this point.

One probable development of the electric furnace in the near future is made possible by the intermittent use that is made of electric power for lighting and motor purposes. When electric power is produced hydraulically, large quantities could be sold for electric-furnace work at moderate prices provided it were only used between certain hours. Although the smelting of ores could hardly be carried on in this intermittent fashion, there are many purposes for which electrical heat could be applied in this way. One of these has been suggested by Richard Moldenke in an article entitled "Electric Smelting for the Foundry,"[1] in which he suggests that foundrymen should make their own steel castings by means of the electric furnace, preferably the induction furnace; that even iron castings would be made better in this way than in the cupola, and that the electric furnace would be ideal for brass melting. Such operations could, of course, be conducted continuously, or as has been suggested above, intermittently so as to obtain the power more cheaply.

In conclusion it should be remembered that water-powers are not the only available source of electrical power for furnace work. The waste gas from the iron blast-furnace can also be employed. This gas, used in large gas engines, will frequently furnish a considerable amount of power in excess of what is needed for running the plant, and this excess could be used for the electric smelting of steel or similar purposes. Prof. J. W. Richards[2] has stated that there is as much as 1,000,000 h.p. available from this source in the United States alone.

[1] Electrochemical and Metallurgical Industry, vol. v, 1907, p. 42.

[2] Trans. Am. Electrochem. Soc., vol. iii, 1903, p. 67.

For some electric-furnace processes coal burned in steam boilers may be used to generate power, but a considerable saving can now be effected by the use of coal, which need not be of very good quality, in gas producers for running large gas engines; while the extensive deposits of peat, which are now being developed, may be utilized in the same way.

Other sources of electric power, which may be used in the future, when the price of coal is getting higher, are the immense movements of water known as the tides. Attempts have also been made to harness the ocean waves, whose great power is attested by many rock-bound coasts, and although their irregularity renders them unsuitable for electric lighting and other uses of electricity where constancy is an essential factor, it would seem possible that certain smelting operations could be conducted in this way. In certain parts of the world the wind blows with considerable force and great regularity, and this might be utilized for the production of electric power at a moderate expense.

The strides of physical science in recent years have been so enormous that there seems to be no limit to what may ultimately be possible, and if in the future we are able, as suggested by Lord Kelvin, to draw endless supplies of power from the ether itself, we can wait with quiet minds the exhaustion of the coal supplies of the world.

INDEX

C

F

N

O

P

Y

Z